LOS ANGELES COUNTY METROPOLITAN TRANSPORTATION AUTHORITY
WESTSIDE SUBWAY EXTENSION PROJECT

C1056 Advanced Utility Relocations Contract, Section 1
Wilshire/La Cienega Station
Temporary Utility Relocations
Amendment 3

Prepared for:

Metro

Prepared by:

PARSONS BRINCKERHOFF

777 South Figueroa Street, Suite 1100
Los Angeles, CA 90017

April 3, 2014

DRAWING NUMBER	SHT NO	DESCRIPTION
		COVER
		TITLE SHEET
AU-01	1	WILSHIRE / LA CIENEGA STATION - INDEX OF DRAWINGS
G-201	2	WILSHIRE / LA CIENEGA STATION - ABBREVIATIONS AND SYMBOLS - SHEET 1 OF 4
G-202	3	WILSHIRE / LA CIENEGA STATION - ABBREVIATIONS AND SYMBOLS - SHEET 2 OF 4
G-203	4	WILSHIRE / LA CIENEGA STATION - ABBREVIATIONS AND SYMBOLS - SHEET 3 OF 4
G-204	5	WILSHIRE / LA CIENEGA STATION - ABBREVIATIONS AND SYMBOLS - SHEET 4 OF 4
G-250	6	WILSHIRE / LA CIENEGA STATION - GENERAL NOTES - SHEET 1 OF 2
G-251	7	WILSHIRE / LA CIENEGA STATION - GENERAL NOTES - SHEET 2 OF 2
G-252	8	WILSHIRE / LA CIENEGA STATION - SANITARY SEWER GENERAL NOTES
G-253	9	WILSHIRE / LA CIENEGA STATION - WATER GENERAL NOTES
G-254	10	WILSHIRE / LA CIENEGA STATION - GENERAL NOTES - SHORING PLANS
G-255	11	WILSHIRE / LA CIENEGA STATION - GENERAL NOTES - SHORING GUIDELINES
		SURVEY CONTROL
W-2001	12	WILSHIRE / LA CIENEGA STATION - CONTROL SURVEY - SHEET 1
W-2002	13	WILSHIRE / LA CIENEGA STATION - CONTROL SURVEY - SHEET 2
W-2003	14	WILSHIRE / LA CIENEGA STATION - CONTROL SURVEY - SHEET 3
W-2004	15	WILSHIRE / LA CIENEGA STATION - CONTROL SURVEY - SHEET 4
W-2005	16	WILSHIRE / LA CIENEGA STATION - CONTROL SURVEY - SHEET 5
W-2006	17	WILSHIRE / LA CIENEGA STATION - CONTROL SURVEY - SHEET 6
W-2007	18	WILSHIRE / LA CIENEGA STATION - CONTROL SURVEY - SHEET 7
W-2008	19	WILSHIRE / LA CIENEGA STATION - CONTROL SURVEY - SHEET 8
W-2009	20	WILSHIRE / LA CIENEGA STATION - CONTROL SURVEY - SHEET 9
W-010	21	WILSHIRE / LA CIENEGA STATION - STANDARD ABBREVIATION - SURVEY AND PLANS - SHEET 1
W-011	22	WILSHIRE / LA CIENEGA STATION - STANDARD SYMBOLS AND LEGEND - SURVEY AND PLANS - SHEET 2
W-301	23	WILSHIRE / LA CIENEGA STATION - TOPOGRAPHIC SURVEY - SHEET 1
W-302	24	WILSHIRE / LA CIENEGA STATION - TOPOGRAPHIC SURVEY - SHEET 2
W-303	25	WILSHIRE / LA CIENEGA STATION - TOPOGRAPHIC SURVEY - SHEET 3
		CRENSHAW BOULEVARD LAY DOWN AREA
U-151	26	WILSHIRE / LA CIENEGA STATION - CRENSHAW BOULEVARD LAY DOWN AREA - PLAN
		WILSHIRE / LA CIENEGA STATION SEWER RELOCATIONS
UC-100	27	WILSHIRE / LA CIENEGA STATION - TEMPORARY SEWER RELOCATION - TITLE SHEET, GENERAL AND CONSTRUCTION NOTES
UC-101	28	WILSHIRE / LA CIENEGA STATION - TEMPORARY SEWER RELOCATION - LINE "A" PLAN AND PROFILE - STA 10+00.00 TO STA 13+13.89
UC-102	29	WILSHIRE / LA CIENEGA STATION - TEMPORARY SEWER RELOCATION - LINE "B" PLAN AND PROFILE - STA 9+96.29 TO STA 14+50.00
UC-103	30	WILSHIRE / LA CIENEGA STATION - TEMPORARY SEWER RELOCATION - LINE "B" PLAN AND PROFILE - STA 14+50.00 TO STA 17+77.05
UC-104	31	WILSHIRE / LA CIENEGA STATION - TEMPORARY SEWER RELOCATION - LINE "C" PLAN AND PROFILE - STA 19+93.50 TO STA 24+50.00
UC-105	32	WILSHIRE / LA CIENEGA STATION - TEMPORARY SEWER RELOCATION - PLAN AND PROFILE - LINE "C" STA 24+50 TO STA 25+95.29, LINE "E", & LINE "F"
UC-106	33	WILSHIRE / LA CIENEGA STATION - TEMPORARY SEWER RELOCATION - LINE "D" PLAN AND PROFILE - STA 10+00.00 TO STA 11.46.09
UC-107	34	WILSHIRE / LA CIENEGA STATION - TEMPORARY SEWER RELOCATION - HOUSE CONNECTION DETAIL, TABLE, AND JUNCTION DETAIL
UC-108	35	WILSHIRE / LA CIENEGA STATION - TEMPORARY SEWER RELOCATION - PROFILE - LATERALS A1, A2, A3, A4, & A5
UC-109	36	WILSHIRE / LA CIENEGA STATION - TEMPORARY SEWER RELOCATION - PROFILE - LATERALS A6 & A7
UC-110	37	WILSHIRE / LA CIENEGA STATION - TEMPORARY SEWER RELOCATION - PROFILE - LATERALS B1, B2, B3, B4, B5, & B6
UC-111	38	WILSHIRE / LA CIENEGA STATION - TEMPORARY SEWER RELOCATION - PROFILE - LATERALS B7, B8, & B9
UC-112	39	WILSHIRE / LA CIENEGA STATION - TEMPORARY SEWER RELOCATION - PROFILE - LATERALS C1, C2, C3, C4, C5, & C6
UC-113	40	WILSHIRE / LA CIENEGA STATION - TEMPORARY SEWER RELOCATION - PROFILE - LATERALS C7, C8, & C9
UC-114	41	WILSHIRE / LA CIENEGA STATION - TEMPORARY SEWER RELOCATION - CLEANOUT STRUCTURE
		WILSHIRE / LA CIENEGA STATION STORM DRAIN RELOCATIONS
UD-100	42	WILSHIRE / LA CIENEGA STATION - TEMPORARY STORM DRAIN RELOCATION - TITLE SHEET, GENERAL AND CONSTRUCTION NOTES
UD-101	43	WILSHIRE / LA CIENEGA STATION - TEMPORARY STORM DRAIN RELOCATION - PLAN AND PROFILE - STA 1+14.50 TO STA 5+35.00
UD-102	44	WILSHIRE / LA CIENEGA STATION - TEMPORARY STORM DRAIN RELOCATION - PLAN AND PROFILE - STA 5+35.00 TO STA 9+11.67
UD-103	45	WILSHIRE / LA CIENEGA STATION - TEMPORARY STORM DRAIN RELOCATION - PLAN AND PROFILE - LATERAL # 2, 3, 4, 5, 6, 7 & 8
UD-104	46	WILSHIRE / LA CIENEGA STATION - TEMPORARY STORM DRAIN RELOCATION - PLAN AND PROFILE - LATERAL # 9, 10, 11, & 12
UD-105	47	WILSHIRE / LA CIENEGA STATION - TEMPORARY STORM DRAIN RELOCATION - DROP MANHOLE DETAIL
UD-106	48	WILSHIRE / LA CIENEGA STATION - STANDARD DETAILS - SHEET 1 OF 2
UD-107	49	WILSHIRE / LA CIENEGA STATION - STANDARD DETAILS - SHEET 2 OF 2
UD-108	50	WILSHIRE / LA CIENEGA STATION - TEMPORARY STORM DRAIN RELOCATION - CLEANOUT STRUCTURE
		WILSHIRE / LA CIENEGA STATION WATER RELOCATIONS
UW-010	51	WILSHIRE / LA CIENEGA STATION - TEMPORARY WATER RELOCATION - TITLE SHEET, GENERAL AND CONSTRUCTION NOTES
UW-011	52	WILSHIRE / LA CIENEGA STATION - TEMPORARY WATER RELOCATION - PLAN AND PROFILE - STA 27+50
UW-012	53	WILSHIRE / LA CIENEGA STATION - TEMPORARY WATER RELOCATION - PLAN AND PROFILE - STA 27+50 TO STA 32+00
UW-013	54	WILSHIRE / LA CIENEGA STATION - TEMPORARY WATER RELOCATION - PLAN AND PROFILE - STA 32+00
UW-014	55	WILSHIRE / LA CIENEGA STATION - TEMPORARY WATER RELOCATION - PLAN AND PROFILE - STA 10+00 TO STA 11+00
UW-015	56	WILSHIRE / LA CIENEGA STATION - TEMPORARY WATER RELOCATION - PLAN AND PROFILE - STA 27+50
UW-016	57	WILSHIRE / LA CIENEGA STATION - TEMPORARY WATER RELOCATION - PLAN AND PROFILE - STA 27+50 TO STA 32+00
UW-017	58	WILSHIRE / LA CIENEGA STATION - TEMPORARY WATER RELOCATION - PLAN AND PROFILE - STA 32+00
UW-018	59	WILSHIRE / LA CIENEGA STATION - TEMPORARY WATER RELOCATION - PLANS AND PROFILES - STA 9+00 TO STA 10+00
UW-019	60	WILSHIRE / LA CIENEGA STATION - TEMPORARY WATER RELOCATION - PLANS AND PROFILES - STA 9+00 TO STA 10+00
UW-020	61	WILSHIRE / LA CIENEGA STATION - TEMPORARY WATER RELOCATION - CONNECTION DETAILS
UW-021	62	WILSHIRE / LA CIENEGA STATION - TEMPORARY WATER RELOCATION - CONNECTION DETAILS
UW-022	63	WILSHIRE / LA CIENEGA STATION - TEMPORARY WATER RELOCATION - CONNECTION DETAILS
UW-023	64	WILSHIRE / LA CIENEGA STATION - TEMPORARY WATER RELOCATION - CONNECTION DETAILS
UW-024	65	WILSHIRE / LA CIENEGA STATION - TEMPORARY WATER RELOCATION - STANDARD DETAILS
UW-025	66	WILSHIRE / LA CIENEGA STATION - TEMPORARY WATER RELOCATION - STANDARD DETAILS
UW-026	67	WILSHIRE / LA CIENEGA STATION - TEMPORARY WATER RELOCATION - CATHODIC PROTECTION NOTES & DETAILS
		WILSHIRE / LA CIENEGA STATION POWER RELOCATIONS
UE-100	68	WILSHIRE / LA CIENEGA STATION - SCE - POWER RELOCATION - GENERAL NOTES
SHEET 1	69	WILSHIRE / LA CIENEGA STATION - SCE - RELOCATION DESIGN PLAN
SHEET 2	70	WILSHIRE / LA CIENEGA STATION - SCE - RELOCATION DESIGN PLAN
UE-101	71	WILSHIRE / LA CIENEGA STATION - SCE - POWER RELOCATION PROFILES - SHEET 1 OF 5
UE-102	72	WILSHIRE / LA CIENEGA STATION - SCE - POWER RELOCATION PROFILES - SHEET 2 OF 5
UE-103	73	WILSHIRE / LA CIENEGA STATION - SCE - POWER RELOCATION PROFILES - SHEET 3 OF 5
UE-104	74	WILSHIRE / LA CIENEGA STATION - SCE - POWER RELOCATION PROFILES - SHEET 4 OF 5
UE-105	75	WILSHIRE / LA CIENEGA STATION - SCE - POWER RELOCATION PROFILES - SHEET 5 OF 5
UE-106	76	WILSHIRE / LA CIENEGA STATION - SCE DUCTBANK CONSTRUCTION - PLAN AND PROFILE - STA 20+00.00 TO STA 24.84.08

DRAWING NUMBER	SHT NO	DESCRIPTION
		WILSHIRE / LA CIENEGA STATION TRAFFIC CONTROL PLANS
		ADVANCED SEWER, WATER & STORM DRAIN RELOCATIONS
SHEET 1 THRU 19	77-95	LA CIENEGA STATION - WTCP - SEWER
SHEET 1 THRU 11	96-106	LA CIENEGA STATION - WTCP - STORM DRAIN
SHEET 1 THRU 29	107-135	LA CIENEGA STATION - WTCP - WATER
SHEET 1 THRU 27	138-162	LA CIENEGA STATION - WTCP - SCE
		WILSHIRE / LA CIENEGA STATION - INFORMATION ONLY DRAWINGS
U-471	163	WILSHIRE / LA CIENEGA STATION - UTILITY RELOCATION CROSS SECTIONS - STA 554+99.50 & STA 565+20.82
U-472	164	WILSHIRE / LA CIENEGA STATION - UTILITY RELOCATION CROSS SECTIONS - STA 565+49.75 & STA 565+69.37
U-473	165	WILSHIRE / LA CIENEGA STATION - UTILITY RELOCATION CROSS SECTIONS - STA 566+03.73 & STA 566+36.21
U-474	166	WILSHIRE / LA CIENEGA STATION - UTILITY RELOCATION CROSS SECTIONS - STA 567+27.93 & STA 568+06.62
U-475	167	WILSHIRE / LA CIENEGA STATION - UTILITY RELOCATION CROSS SECTIONS - STA 568+53.85 & STA 568+91.06
U-476	168	WILSHIRE / LA CIENEGA STATION - UTILITY RELOCATION CROSS SECTIONS - STA 569+26.61 & STA 569+74.56
U-477	169	WILSHIRE / LA CIENEGA STATION - UTILITY RELOCATION CROSS SECTIONS - STA 570+95.74 & STA 573+77.24
U-478	170	WILSHIRE / LA CIENEGA STATION - UTILITY RELOCATION CROSS SECTIONS - STA 573+90.95 & STA 574+28.65
U-479	171	WILSHIRE / LA CIENEGA STATION - UTILITY RELOCATION CROSS SECTIONS - STA 574+88.79
U-480	172	WILSHIRE / LA CIENEGA STATION - UTILITY RELOCATION CROSS SECTIONS

C1056 AUR CONTRACT DRAWING NO. AU-01

PROJECT: BEVERLY HILLS
WESTSIDE SUBWAY EXTENSION
ADVANCED UTILITY RELOCATIONS

WILSHIRE / LA CIENEGA STATION
INDEX OF DRAWINGS

LOS ANGELES COUNTY
METROPOLITAN TRANSPORTATION AUTHORITY
Metro

PARSONS BRINCKERHOFF
777 SOUTH FIGUEROA ST. 11TH FLOOR
LOS ANGELES, CA 90017
PREPARED UNDER THE SUPERVISION OF:
NAME: ZAFER MUDAR LIC. # C64154; EXPIRES 12/31/14 DATE

SCALE: NONE
F.B. NO. F.B.NO. PAGE -- TO --

DESIGNED	Z. MUDAR	DATE	02/04/14
DRAWN	R. NACION	DATE	02/04/14
CHECKED	N. HUMBY	DATE	02/04/14

DATE	DESCRIPTION	BY	REV
4/3/14	AMENDMENT 3	ZM	1
2/21/14	ISSUED FOR SOLICITATION	ZM	0

SUBMITTED ____ DATE ____
APPROVED ____ CITY ENGINEER DATE ____

JOB NO. 1335
DRAWING NO. 7443
SHEET 1 OF 172 SHEET

CITY OF BEVERLY HILLS, CALIFORNIA
CIVIL ENGINEERING DEPARTMENT

Plotted by: Nacion,Roque Plot Date & Time: 4/1/2014 4:22:35 PM
DWG filename: L:\LAWSBIM\WACBM\CADD\12_UTILITIES\CITYOFBH\BHNOTES\C1056GAU01.DWG

GENERAL NOTES:

1. ALL WORK SHALL CONFORM TO THE LATEST EDITION AND SUPPLEMENTS OF THE STANDARD SPECIFICATIONS AND PLANS FOR PUBLIC WORKS CONSTRUCTION (SSPWC) "GREEN BOOK" AND AS AMENDED BY THE CITY OF BEVERLY HILLS GENERAL CONDITIONS, GENERAL REQUIREMENTS, SPECIAL PROVISIONS, STANDARD DRAWINGS AND TECHNICAL SPECIFICATIONS. THE WORK SHALL ALSO CONFORM TO THE UTILITY OWNER AGENCY STANDARD PLANS CALLED FOR ON THESE PLANS.

2. THE CONTRACTOR SHALL POTHOLE AND VERIFY ALL UTILITIES WITHIN 3FT OF CONSTRUCTION ZONE WHETHER SHOWN OR NOT SHOWN ON THESE PLANS.

3. INSPECTION:
ALL WORK AND MATERIALS ARE SUBJECT TO INSPECTION PURSUANT TO GREEN BOOK, CITY OF BEVERLY HILLS REQUIREMENTS, UTILITY OWNERS REQUIREMENTS AND PERMITTING AGENCY REQUIREMENTS. FOR INSPECTION CONTACT INFORMATION, SEE COVER SHEET.

4. PROTECTION OF SUBSTRUCTURES:
   A. PROTECT IN PLACE ALL EXISTING CONDITIONS (SUBSURFACE AND ABOVE GROUND) WITHIN CONSTRUCTION ZONE AND ADJACENT TO THE CONSTRUCTION ZONE.
   B. REPAIR ANY DAMAGE TO THE EXISTING CONDITIONS CAUSED BY THE CONTRACTOR'S OPERATION AT THE SOLE EXPENSE OF THE CONTRACTOR.
   C. ANY TEMPORARY MODIFICATION NECESSARY TO PERFORM THE CONTRACTOR'S CONSTRUCTION OPERATION IS DEEMED INCLUDED IN WORK. NO EXTRA PAYMENT SHALL BE MADE FOR SUCH WORK.

5. POTHOLE:
THE CONTRACTOR IN CONFORMANCE WITH CITY OF BEVERLY HILLS AND UTILITY OWNER/AGENCY REQUIREMENTS, SHALL POTHOLE EXISTING SUBSURFACE INSTALLATIONS CARRYING UNSTABLE SUBSTANCES TO DETERMINE THEIR LOCATIONS AND ELEVATIONS PRIOR TO COMMENCING EXCAVATION. ALL NECESSARY PERMITS AND APPROVALS ARE REQUIRED PRIOR TO WORKING WITHIN THE CITY OF BEVERLY HILLS PUBLIC RIGHT OF WAY. UNDERGROUND INVESTIGATION AND POT HOLING WILL BE REQUIRED FOR UTILITIES WITHIN PUBLIC RIGHT OF WAY.

6. STREET FEATURES INCLUDING BUT NOT LIMITED TO CURB AND GUTTERS, SIDEWALKS, DRIVEWAYS:
   A. REPAIR AND/OR REPLACE ANY EXISTING BROKEN OR OFF GRADE CONCRETE CURB, GUTTER, SIDEWALK OR STREET PAVEMENT IMMEDIATELY ADJACENT TO OR WITHIN THE AREA OF IMPROVEMENT SHOWN IN THESE DRAWINGS TO THE SATISFACTION OF METRO'S AUTHORIZED REPRESENTATIVE AND THE CITY OF BEVERLY HILLS.
   B. CONSTRUCTION STAKES FOR CURB AND LONGITUDINAL GUTTER, WITH GRADE LESS THAN 0.5% SHALL BE SET AT 12.5 FEET ON CENTER.
   C. IT IS THE CONTRACTOR'S RESPONSIBILITY TO FIELD CHECK THE JOB SITE COMPLETELY TO IDENTIFY ALL CONCRETE CROSS GUTTER, CURB & GUTTER, SIDEWALKS, DRIVEWAYS, BUSPADS, AND MISCELLANEOUS CONCRETE STRUCTURES AFFECTED BY THE WORK. WHERE REMOVAL AND RECONSTRUCTION OF SUCH CONCRETE STRUCTURES IS NECESSARY FOR THE WORK, COST FOR SUCH REMOVAL AND RECONSTRUCTION SHALL BE INCLUDED IN THE BID. RECONSTRUCTION OF ALL STREET IMPROVEMENT FEATURES SHALL BE PER CITY OF BEVERLY HILLS STANDARD DETAIL DRAWINGS.

7. RESURFACING:
WORK REQUIRED UNDER THIS PLAN SHALL ALSO INCLUDE THE CONSTRUCTION OF PERMANENT TRENCH RESURFACING IN ALL AREAS WHERE UTILITY LINES HAVE BEEN INSTALLED. THE RESURFACING SHALL BE IN ACCORDANCE WITH THE STANDARD SPECIFICATIONS FOR PUBLIC WORKS CONSTRUCTION (SSPWC) "GREEN BOOK" AS MODIFIED BY CITY OF BEVERLY HILLS STANDARD DRAWING BH 114.

8. PAVING:
PAVING OF ROADWAY AREAS SHALL BE WITHHELD UNTIL COMPLETED UTILITY CHANGES ON INSTALLATIONS HAVE BEEN MADE UNDER CITY PERMIT. ASPHALT CONCRETE WEARING SURFACE SHALL NOT BE PLACED UNTIL ALL AC BASE IS PLACED AS APPROVED BY CITY OF BEVERLY HILLS.

9. NOTICE TO ADJACENT PROPERTY OWNER:
AT LEAST TEN (10) DAYS BEFORE THE START OF CONSTRUCTION, THE CONTRACTOR SHALL NOTIFY, IN WRITING, ABUTTING PROPERTY OCCUPANTS OF THE PROPOSED CONSTRUCTION START DATE. A COPY OF SAID WRITTEN NOTIFICATION SHALL BE PROVIDED TO METRO'S AUTHORIZED REPRESENTATIVE AND THE CITY OF BEVERLY HILLS FOR APPROVAL BEFORE THEY ARE DISTRIBUTED TO THE OCCUPANTS OF THE ABUTTING PROPERTY. THE CONTRACTOR IS REMINDED THAT NO NOTICES ARE TO BE PLACED IN OR ATTACHED TO MAILBOXES.

10. ADVANCE CONSTRUCTION NOTICE SIGNS:
   A. SIGNS FOR GIVING ADVANCE NOTICE TO MOTORISTS OF TRAFFIC DISRUPTION, MUST BE FURNISHED AND PLACED AS A PART OF THIS PROJECT IN ACCORDANCE WITH CITY OF BEVERLY HILLS REQUIREMENTS.
   B. ADDITIONALLY COMPLY WITH REQUIREMENTS OF ALL OTHER RESPECTIVE PERMITTING AGENCIES.

11. UNDERGROUND SERVICE ALERT:
BEFORE COMMENCING ANY EXCAVATION, THE CONTRACTOR SHALL OBTAIN AN UNDERGROUND SERVICE ALERT (USA) INQUIRY ID NUMBER BY CALLING (800) 227-2600. TWO WORKING DAYS SHALL BE ALLOWED AFTER THE ID NUMBER IS OBTAINED AND BEFORE THE CONTRACTOR STARTS THE EXCAVATION WORK FOR UTILITY OWNER NOTIFICATION. IF THE UTILITY OWNER IS THE CITY OF BEVERLY HILLS, A CONFIRMATION NUMBER INDICATING THE CITY HAS BEEN NOTIFIED SHALL BE OBTAINED BY USA AND/OR THE CONTRACTOR FROM THE APPROPRIATE CITY DEPARTMENT. THE ID NUMBER TOGETHER WITH THE DATE ACQUIRED SHALL BE REPORTED TO THE DEPARTMENT ISSUING THE CONFIRMATION NUMBER WHEN CALLING FOR INSPECTION. ID NUMBERS WILL NOT BE GIVEN MORE THAN 10 WORK DAYS BEFORE STARTING EXCAVATION WORK.

12. SURVEY MONUMENTS:
SURVEY MONUMENT PRESERVATION IS REQUIRED AND SHALL INCLUDE SURVEY FIELD NOTES PER SECTION 2-9 OF THE STANDARD SPECIFICATIONS FOR PUBLIC WORKS CONSTRUCTION.

13. SURVEY BENCH MARKS:
SEE DRAWINGS W-2001 THROUGH W-2009, W-010, W-011, AND W-301 THROUGH W-303 FOR SURVEY CONTROL.

14. COORDINATION WITH CITY OF BEVERLY HILLS DEPARTMENT OF BUILDING AND SAFETY:
AT LEAST THIRTY (30) DAYS BEFORE THE START OF CONSTRUCTION THE CONTRACTOR SHALL CONTACT CITY OF BEVERLY HILLS AT (310) 285-1141 TO VERIFY THAT THERE IS NO ACTIVE OR PROPOSED PROJECT IN THIS PROJECT WORK AREA THAT IS ANTICIPATED TO HAPPEN CONCURRENTLY.

15. CONTRACTOR SHALL DETERMINE IN ADVANCE OF THE WORK THE LOCATION OF TRAFFIC SIGNAL CONDUIT OR OTHER TRAFFIC SIGNAL CONDUIT OR OTHER TRAFFIC SIGNAL EQUIPMENT WHICH MAY INTERFERE WITH THE WORK OR WHICH MAY BE DAMAGED BY HIS OPERATIONS. CONTRACTOR SHALL MAINTAIN OPERATION OF TRAFFIC SIGNALS DURING CONSTRUCTION OPERATIONS.

(CONTINUED)

16. COORDINATION WITH BUS SERVICE:
NOTIFY THE METROPOLITAN TRANSIT AUTHORITY AT (213) 922-4632 48 HOURS PRIOR TO ANY WORK WHICH MAY AFFECT NORMAL BUS OPERATIONS.

17. STREET TREES AND TREE WELL COVERS:
   A. CONTRACTOR SHALL IDENTIFY IN ADVANCE OF CONSTRUCTION ANY POTENTIAL IMPACT TO EXISTING STREET TREES AND STREET TREE WELL COVERS. CONTRACTOR SHALL NOTIFY CITY OF BEVERLY HILLS AT (310) 285-2537 30 DAYS IN ADVANCE OF PROPOSED CONSTRUCTION START TO INITIATE RESOLUTION OF TREATMENT TO ANY INTERFERING STREET TREES.
   B. PLANT REPLACEMENT TREES; QUANTITY AND LOCATION TO BE AS DETERMINED BY THE CITY OF BEVERLY HILLS FOR TREE REPLACEMENT IF REQUIRED.
   C. THE CONTRACTOR SHALL NOTIFY THE CITY OF BEVERLY HILLS FIVE WORKING DAYS PRIOR TO DEMOLITION OF THE SIDEWALK FOR THE MARKING OF THE TREE LOCATIONS. CALL (310) 285-1141 or 2467.
   D. TREE REMOVAL:
   PRIOR TO THE REMOVAL OF ANY STREET TREE, THE CONTRACTOR SHALL SUBMIT FOR APPROVAL TO CITY OF BEVERLY HILLS (30 DAYS PRIOR TO PLANNED REMOVAL). STREET TREES WITHIN PUBLIC RIGHT OF WAY SHALL BE REMOVED ONLY WHEN APPROVAL HAS BEEN OBTAINED FROM CITY OF BEVERLY HILLS.
   E. ROOT TRIMMING: TREE(S) MUST BE TRIMMED PRIOR TO ROOT PRUNING TO COMPENSATE FOR THE ROOT LOSS AND TO STABILIZE THE TREE. THE CROWN OF THE TREE IS TO BE REDUCED BY NO MORE THAN 25% OF FOLIAGE, UNLESS APPROVED OTHERWISE BY THE CITY OF BEVERLY HILLS. PRUNE THE ROOTS ON ONE SIDE OF THE ROOT SYSTEM ONLY (UNLESS APPROVED OTHERWISE BY THE CITY OF BEVERLY HILLS). DO NOT PRUNE ROOTS LARGER THAN 4 IN DIAMETER.

18. THE CONTRACTOR SHALL PROTECT ALL EXISTING DRAINAGE STRUCTURES DURING CONSTRUCTION AND KEEP THEM FREE OF CONCRETE, TRASH, SEDIMENT AND OTHER CONSTRUCTION DEBRIS.

19. PEDESTRIAN ACCESS TO SIDEWALKS AND CROSSWALKS:
MAINTAIN FIVE FOOT WIDE PEDESTRIAN ACCESS ON SIDEWALK AT ALL TIMES, ONLY ONE (1) CROSSWALK MAY BE CLOSED AT ANY TIME WITHIN AN INTERSECTION. ALL EXCAVATION ON THE SIDEWALK SHALL BE STEEL PLATED AND FEATHERED PER STANDARD PLAN BH 113.

20. THE CONTRACTOR SHALL PROVIDE AN ALTERNATIVE ACCESSIBLE ROUTE FOR DISABLE PEDESTRIANS WHENEVER AN EXISTING ROUTE IS BLOCKED DUE TO SIDEWALK OR ADJACENT CONSTRUCTION. THE ALTERNATIVE ROUTE SHALL BE PROVIDED AT ALL TIMES EXCEPT AS APPROVED BY THE INSPECTOR OR ENGINEER. THE FOLLOWING TEMPORARY ALTERNATIVES MAY BE EMPLOYED SUBJECT TO PRIOR APPROVAL BY THE INSPECTOR OR ENGINEER ON A SPECIFIC LOCATION BASIS.
   A. PROVIDE A MINIMUM 5-FOOT WIDE WALL.
   B. PROVIDE TEMPORARY SIGNING WITH A DISABLED ACCESS LOGO POINT TO AN ALTERNATIVE ACCESSIBLE ROUTE WITHIN 300 FEET.
   C. A 5-FOOT WIDE CLEAR WALKWAY IN A PARKING OR CLOSED CURB LANE SHALL CONFORM TO THE LATEST CALIFORNIA MUTCD (SEPTEMBER 2006).
   D. TEMPORARY AC CURB RAMPS IN A PARKING ON CLOSED CURB LANE NEXT TO THE CURB. THEY SHALL BE 4-FEET WIDE, PARALLEL TO THE STREET, WITH A 4-FOOT BY 4-FOOT LEVELS CLEAR LANDING AT THE TOP AND A MAXIMUM RAMP SLOPE OF 2. ALL PEDESTRIAN DETOURS SHALL CONFORM TO THE LATEST CALIFORNIA MUTCD (SEPTEMBER 2006).
   E. MOVABLE WOODEN CURB RAMPS AS IN "D" ABOVE SHALL HAVE WOODEN OR METAL HAND RAILS ON THE NONRAMP STREET SIDES
   F. OTHER TEMPORARY ARRANGEMENTS AS THE INSPECTOR OR ENGINEER MAY AUTHORIZE. (1)

21. THE EXISTENCE, LOCATION AND CHARACTERISTICS OF UNDERGROUND UTILITY INFORMATION SHOWN ON THESE PLANS HAS BEEN OBTAINED FROM REVIEW OF AVAILABLE RECORD DATA AND ARE SHOWN WITH THEIR APPROXIMATE LOCATION AND EXTENT. NO PRESENTATION IS MADE AS TO THE ACCURACY OR COMPLETENESS OF SAID UTILITY INFORMATION. THE CONTRACTOR SHALL TAKE PRECAUTIONARY MEASURES TO PROTECT THE UTILITY LINES SHOWN AND ANY OTHER LINES NOT SHOWN ON THESE PLANS BUT DISCOVERED DURING CONSTRUCTION. CONTRACTOR SHALL BE RESPONSIBLE TO NOTIFY THE OWNERS OF THE UTILITIES OR SUBSTRUCTURES BEFORE STARTING WORK.

22. CONTRACT WORK IS IN PUBLIC STREETS IN RESTRICTIVE WORK SPACE. CONTRACTORS ARE REQUIRED TO EXAMINE AND JUDGE, AS THEIR OWN RESPONSIBILITY THE LOCATION, PHYSICAL CONDITIONS AND SURROUNDINGS OF PROPOSED WORK DURING THE PRE-BID MEETING AND OTHER SITE VISITS AS DEEMED APPROPRIATE BY THE CONTRACTOR.

23. SHOULD CONFLICTING INFORMATION BE FOUND ON THE PLANS. THE CONTRACTOR SHALL NOTIFY METRO'S AUTHORIZED REPRESENTATIVE BEFORE PROCEEDING WITH THE ASSOCIATED WORK, ASKING FOR CLARIFICATION OF THE CONFLICTING INFORMATION.

24. ALL EXISTING SANITARY SEWER & STORM DRAIN MAINTENANCE HOLES WITHIN THE WORK AREA THAT WILL REMAIN IN OPERATION AFTER CONSTRUCTION SHALL BE ADJUSTED TO GRADE IF IMPACTED.

25. UNLESS OTHERWISE NOTED THE CONTRACTOR SHALL ADJUST WATER SERVICES AND WATER GATE VALVES TO GRADE AFTER NOTIFYING AND COORDINATING WITH DWP-WS IF IMPACTED. (1)

26. THE CONTRACTOR SHALL BE RESPONSIBLE FOR BARRICADING ITS WORK AREA TO PREVENT VEHICLES FROM PARKING IN THE PROPOSED LINE OF OPERATIONS. ANY DAMAGE TO PARKED VEHICLES CAUSED BY THE CONSTRUCTION OPERATIONS SHALL BE THE CONTRACTOR'S LIABILITY.

27. EXISTING STRUCTURES, STREETS, FACILITIES AND OTHER IMPROVEMENTS SHALL BE PROTECTED FROM UNDERMINING DISPLACEMENT OR SUBSIDENCE DURING CONSTRUCTION OF NEW STRUCTURES AND UNDERGROUND UTILITIES. IF SHORING IS UTILIZED, OBTAIN WRITTEN APPROVAL FROM METRO'S AUTHORIZED REPRESENTATIVE OF THE SHORING PLAN AND CALCULATIONS PRIOR TO INSTALLATION AND NEW CONSTRUCTION.

28. THE CONTRACTOR SHALL REPAIR OR REPLACE ALL IRRIGATION PIPING ENCOUNTERED OR DAMAGED DURING THE PERFORMANCE OF THE WORK.

(CONTINUED)

29. CONCRETE SIDEWALK PAVEMENT SHALL BE REMOVED TO NEATLY SAW CUT EDGES; SAW CUTS SHALL BE MADE TO A MIN. OF 2" INCHES. IF A SAW CUT IN CONCRETE PAVEMENT FALLS WITHIN 3' FEET OF A CONSTRUCTION JOINT, COLD JOINT, EXPANSION JOINT, OR EDGE, THE CONCRETE SHALL BE REMOVED TO THE JOINT OR EDGE, EXPANSION JOINT, OR EDGE. THE EDGES OF EXISTING CONCRETE PAVEMENT ADJACENT TO TRENCHES, WHERE DAMAGED SUBSEQUENT TO SAW CUTTING THE PAVEMENT, SHALL AGAIN BE SAW CUT TO NEAT, STRAIGHT LINES FOR THE PURPOSE OF REMOVING THE DAMAGED PAVEMENT AREAS, SUCH SAW CUT SHALL BE EITHER PARALLEL TO THE ORIGINAL SAW CUTS OR SHALL BE CUT ON AN ANGLE WHICH DEPARTS FROM THE ORIGINAL SAW CUT NOT MORE THAN ONE INCH IN EACH SIX INCHES.

30. ALL STREET FEATURES INCLUDING BUT NOT LIMITED TO SIDEWALKS AND CURB RAMPS, CURBS & GUTTERS, DRIVEWAYS, AND PAVEMENT SHALL BE RESTORED AND REPLACED IF DAMAGED IN ACCORDANCE WITH CITY OF BEVERLY HILLS GENERAL CONDITIONS, SPECIAL PROVISIONS AND THE STANDARD PLANS.

31. CONTRACTOR SHALL REPLACE ALL SIGNING, STRIPING, DOTS AND REFLECTORS DAMAGED DURING CONSTRUCTION PER CITY OF BEVERLY HILLS OR CALTRANS STANDARDS. (1)

32. TEMPORARY HOT MIX AC PAVEMENT SHALL BE PLACED ADJACENT TO ALL CONCRETE EDGES AND OTHER ROUGH AREAS WITHIN THE AREA OF REMOVAL, SO AS TO PROVIDE A SMOOTH SURFACE FOR VEHICULAR TRAFFIC.

33. CONTRACTOR SHALL REPAIR AND REPLACE AND DAMAGE OR EXCESSIVE WEAR AND TEAR TO ROADS OR ADJACENT PUBLIC OR PRIVATE PROPERTY CAUSED BY CONSTRUCTION RELATED WORK TO THE SATISFACTION OF METROS AUTHORIZED REPRESENTATIVE AND THE CITY OF BEVERLY HILLS. (1)

34. RESURFACING OF TRENCHES:
   A. THE CONTRACTOR SHALL PAVE AND RESURFACE ALL TRENCHES PER STANDARD SPECIFICATIONS FOR PUBLIC WORKS CONSTRUCTION (SSPWC) "GREEN BOOK" AND IN ACCORDANCE WITH CITY OF BEVERLY HILLS SPECIAL PROVISIONS AND STANDARD DRAWING BH 114.
   B. RESURFACING AREA FOR AC PAVEMENT AND FOR CONCRETE SHALL BE IN ACCORDANCE WITH STANDARD PLAN BH 114 FOR AC PAVEMENT AND CONCRETE PAVEMENT. IF PAVEMENT CUTS ARE MADE IN A CONCRETE BUS PAD OR CONCRETE PAVEMENT, THE CONCRETE PAVEMENT SHALL BE REPLACED USING STANDARD DRAWING BH 114 OR AS DIRECTED BY THE CITY OF BEVERLY HILLS.
   C. DURING CONSTRUCTION THE CONTRACTOR MAY ENCOUNTER A PCC LAYER BENEATH THE ASPHALT CEMENT ROADWAY. THE PAVEMENT RESTORATION AND RESURFACING SHALL BE PER STANDARD PLAN BH 114.

35. THE CONTRACTOR SHALL REPLACE ALL STREET FEATURES REMOVED/DAMAGED BY ITS OPERATIONS, INCLUDING BUT NOT LIMITED TO THE EXISTING CONCRETE LONGITUDINAL (LNG), CROSS GUTTERS (XG), CURB AND GUTTERS (C&G), DRIVEWAYS (DWY), ALLEY INTERSECTIONS (AI), TRAFFIC ISLAND DIVIDER (TID), SIDEWALK (SW), ACCESS RAMP (AR), BUS PAD (BP), ASPHALT SPEED BUMP (SB) AND/OR STAMPED ASPHALT CROSSWALK (SAC). REMOVAL AND REPLACEMENT SHALL BE PER CITY OF BEVERLY HILLS STANDARD PLANS FOR SUCH WORK AND GREEN BOOK AT NO ADDITIONAL COST. THE CONTRACTOR IS ADVISED THAT IT IS THEIR RESPONSIBILITY TO FIELD CHECK THE JOB SITE COMPLETELY AND TO IDENTIFY ALL STATED AND UNSTATED STREET FEATURES AFFECTED BY SPECIFIED WATER RELOCATIONS, FOR WORK TO BE PERFORMED IN THE CITY OF BEVERLY HILLS RIGHT OF WAY,

36. CONTRACTOR SHALL MAINTAIN MINIMUM STANDARD CLEARANCE BETWEEN PROPOSED SEWER LINE AND EXISTING SEWER AND STORM DRAIN FACILITIES, PER PLANS AND PER THE GREEN BOOK.

37. ALL ASPHALT CONCRETE AND/OR CONCRETE PAVEMENT SHALL BE REPLACED PER GREEN BOOK AND PER STANDARD PLAN BH 114.

38. ALL DEBRIS CREATED BY REMOVAL OPERATIONS SHALL BECOME THE PROPERTY OF THE CONTRACTOR AND SHALL BE DISPOSED OF THE SAME WORK DAY, AWAY FROM THE JOB SITE IN A MANNER AND AT LOCATIONS ACCEPTABLE TO ALL AGENCIES AFFECTED BY THE WORK.

39. THE CONTRACTOR SHALL OBTAIN ALL NECESSARY PERMITS INCLUDING BUT NOT LIMITED TO PUBLIC RIGHT-OF-WAY USE PERMIT, EXCAVATION PERMIT, SEWER, STORM DRAIN AND WATERLINE CONSTRUCTION PERMIT.

40. GAS LATERAL LOCATIONS ARE NOT SHOWN AND CONTRACTOR SHALL PROTECT THEM IN PLACE. (1)

41. TRENCH BACKFILL FOR UTILITIES SHALL BE CONCRETE SLURRY 100-E-100 OF THE GREEN BOOK. BACKFILL FOR ALL OTHER UTILITIES SHALL BE CLSM OR EQUAL AS SPECIFIED BY CITY OF BEVERLY HILLS OR GREENBOOK.

A. THE CONTRACTOR SHALL OBTAIN NECESSARY PERMIT FROM THE STATE OF CALIFORNIA DIVISION OF INDUSTRIAL SAFETY PRIOR TO THE ISSUANCE OF A GRADING PERMIT (HSC 79225. EFF 3-6-761).
B. CONTRACTOR SHALL ASSUME SOLE AND COMPLETE RESPONSIBILITY FOR HIS OWN WORK AREA AND JOB SITE CONDITIONS DURING THE COURSE OF CONSTRUCTION OF THIS PROJECT, INCLUDING SAFETY OF ALL PERSONS AND PROPERTY; THAT THIS REQUIREMENT SHALL APPLY CONTINUOUSLY AND NOT BE LIMITED TO NORMAL WORKING HOURS; AND THAT THE CONTRACTOR SHALL DEFEND, INDEMNIFY AND HOLD THE UTILITY OWNER, METRO, THE ENGINEERS REPRESENTATIVE AND THE CITY OF BEVERLY HILLS HARMLESS FROM ANY AND ALL LIABILITY, REAL OR ALLEGED IN CONNECTION WITH THE PERFORMANCE OF THE WORK ON THE PROJECT.
C. THE CONTRACTOR SHALL ENFORCE ALL SAFETY MEASURES. THE CONTRACTOR SHALL DESIGN, CONSTRUCT AND MAINTAIN ALL SAFETY DEVICES. INCLUDING SHORING AND CONFINED SPACE ENTRY, AND SHALL BE SOLELY RESPONSIBLE FOR CONFORMING TO ALL LOCAL, STATE AND FEDERAL SAFETY AND HEALTH STANDARDS, LAWS, AND REGULATIONS.
D. SHORING SHALL COMPLY WITH THE CALIFORNIA ADMINISTRATIVE CODE, TITLE 8; CONSTRUCTION SAFETY ORDERS, INJURY AND ILLNESS PREVENTION - SAFETY MEASURES OF THE GENERAL CONDITIONS AND EXCAVATION SHORING, FORMS & FALSE WORK OF THE GENERAL REQUIREMENTS. SHORING PLANS AND CALCULATIONS SHALL BE PREPARED BY A STATE OF CALIFORNIA REGISTERED CIVIL ENGINEER AND SUBMITTED TO THE ENGINEERS REPRESENTATIVE AND THE CITY OF BEVERLY HILLS FOR REVIEW AND APPROVAL.
E. THE CONTRACTOR SHALL BE RESPONSIBLE FOR CONTROLLING ANY GROUNDWATER AND SURFACE RUNOFF DURING EXCAVATION.
F. UNLESS OTHERWISE NOTED ON THE PLAN, SUPPORT ALL EXISTING STORM DRAINS, SEWERS AND OTHER UTILITIES ACROSS TRENCHES IN ACCORDANCE WITH THE GREEN BOOK AND THE CITY OF BEVERLY HILLS STANDARD SPECIFICATIONS AND PLANS.
G. THE CONTRACTOR SHALL ASSUME THAT A SERVICE CONNECTION SERVES EVERY PROPERTY OR PARCEL FOR EACH TYPE OF UTILITY EVEN IF THE MAIN LINE CONDUIT IS NOT INDICATED ON THE PLANS. THE CONTRACTOR SHALL NOTIFY UNDERGROUND SERVICE ALERT (USA) OR RELEVANT UTILITY COMPANIES PRIOR TO EXCAVATION PER THE CONTRACT DOCUMENTS AND ANY OTHER APPLICABLE STATE & FEDERAL CODES AND REGULATIONS FOR IDENTIFYING UTILITIES. THE "PARALLEL OFFSET" IS TIED TO THE PROPERTY LINE.
H. THE CONTRACTOR SHALL PROTECT ALL EXISTING UTILITIES AND SUPPORT ALL UNDERGROUND UTILITIES INCLUDING BUT NOT LIMITED TO WATER CONDUITS, DUCT BANKS AND PIPES, AT TRENCH CROSSINGS IN ACCORDANCE WITH THE GREEN BOOK AND THE CITY OF BEVERLY HILLS SPECIAL PROVISIONS (1) AND STANDARD DRAWINGS 224-2, 225-5 AND BH 210. (1)

C1056 AUR CONTRACT DRAWING NO. G-250

LOS ANGELES COUNTY
METROPOLITAN TRANSPORTATION AUTHORITY
Metro

PARSONS BRINCKERHOFF

777 SOUTH FIGUEROA ST. 11TH FLOOR
LOS ANGELES, CA 90017

PREPARED UNDER THE SUPERVISION OF:

NAME: ZAFER MUDAR LIC. # C64154; EXPIRES 12/31/14 DATE

REGISTERED PROFESSIONAL ENGINEER — ZAFER MUDAR — No. C64154 — EXPIRES: 12/31/2014 — CIVIL — STATE OF CALIFORNIA

SCALE: NONE
F.B. NO. F.B.NO. PAGE -- TO --

DESIGNED	Z. MUDAR	DATE	02/07/14
DRAWN	R. NACION	DATE	02/07/14
CHECKED	N. HUMBY	DATE	02/07/14

DATE	DESCRIPTION	BY	REV
4/3/14	AMENDMENT 3	ZM	1
2/21/14	ISSUED FOR SOLICITATION	ZM	0

PROJECT: BEVERLY HILLS
WESTSIDE SUBWAY EXTENSION
ADVANCED UTILITY RELOCATIONS
WILSHIRE / LA CIENEGA STATION
GENERAL NOTES
SHEET 1 OF 2

SUBMITTED ____ DATE ____
APPROVED ____ (CITY ENGINEER) DATE ____

JOB NO. 1335 DRAWING NO. 7443
SHEET 6 OF 172 SHEET

CITY OF BEVERLY HILLS, CALIFORNIA
CIVIL ENGINEERING DEPARTMENT

DWG filename: L:\LAWSBIM\WACBM\CADD\12_UTILITIES\CITYOFBH\BHNOTES\C1056G250.DWG Plot Date & Time: 4/1/2014 2:47:52 PM Plotted by: Nacion,Roque

NATURAL GAS LINE WARNING:

EXCAVATION IS IN THE VICINITY OF UNDERGROUND HIGH PRESSURE AND LOW PRESSURE NATURAL GAS LINES. THE PIPELINES ARE SCG OPERATED IN COMPLIANCE WITH FEDERAL AND STATE SAFETY REGULATIONS. SCG STANDBY PERSONNEL ARE RESPONSIBLE FOR ENFORCING THE SAFETY PRECAUTIONS BELOW, AND ARE AUTHORIZED TO HALT THE EXCAVATION IF THESE PRECAUTIONS ARE NOT FOLLOWED:

1. ONCE AN SCG REPRESENTATIVE IS ONSITE, THE CONTRACTOR SHALL CAREFULLY HAND DIG WITH SCG APPROVED MEANS AND METHODS WITHIN 2 FEET OF ANY NATURAL GAS TRANSMISSION PIPELINE.
2. NO POWER OPERATED EQUIPMENT SHALL BE ALLOWED WITHIN 2 FEET OF ANY PORTION OF THE NATURAL GAS TRANSMISSION LINE.
3. IF ANY CONTACT OF THE PIPE IS MADE, EVEN IF THERE IS NO VISIBLE DAMAGE, THE CONTACT AREA MUST BE IMMEDIATELY INSPECTED BY AN SCG WELDING INSPECTOR. THIS MAY SIGNIFICANTLY DELAY THE WORK IF SHORING OR OTHER SAFETY PRECAUTIONS ARE NEEDED TO ALLOW THE INSPECTION.
4. CONTRACTOR SHALL CONTACT SCG 10 DAYS PRIOR TO START OF WORK NEAR ANY GAS LINES.

STREET LIGHTING NOTES:

1. THE CONTRACTOR SHALL PROTECT AND MAINTAIN ALL STREET LIGHTING FACILITIES EXISTING WITHIN THE WORK AREA. SHOULD ANY DAMAGE TO THE EXISTING STREET LIGHTING OCCUR, THE CONTRACTOR SHOULD IMMEDIATELY NOTIFY THE PERMITTING AGENCY.
   A. FOR THE CITY OF BEVERLY HILLS NOTIFY TRAFFIC SIGNAL AND STREET LIGHTING FIELD OPERATIONS DIVISION, BY TELEPHONING (310) 285-2467; OR AFTER 4:30 P.M.(3:00 P.M. ON FRIDAYS),
   B. THE CONTRACTOR SHALL ARRANGE FOR IMMEDIATE REPAIRS AND RESTORATION TO SERVICE OF THE DAMAGED LIGHTING SYSTEM AT NO COST TO THE CITY. A LICENSED ELECTRICAL CONTRACTOR IS REQUIRED TO MAKE ALL REPAIRS. ALL STREET LIGHTING WORK SHALL BE MADE IN ACCORDANCE WITH THE LATEST EDITION AND SUPPLEMENTS OF THE "STANDARD SPECIFICATIONS FOR PUBLIC WORKS CONSTRUCTION", GREEN BOOK AS MODIFIED BY THE CITY OF BEVERLY HILLS STDS. AND SPECIFICATIONS.
   C. UNAUTHORIZED WORK OR DAMAGE TO THE CIRCUIT COULD RESULT IN SERIOUS INJURY. THE CONTRACTOR SHALL MAKE IMMEDIATE REPAIR TO THE DAMAGED LIGHTING SYSTEM. PULLBOXES (OTHER THAN THOSE SPECIFIED ON THE PLAN) MAY BE INSTALLED ONLY UPON APPROVAL OF THE CITY OF BEVERLY HILLS. WARNING: SAFETY CLEARANCE SHALL BE OBTAINED DAILY FROM AFFECTED UTILITY COMPANY BEFORE DOING ANY WORK ON EXISTING CIRCUIT.

TRAFFIC SIGNAL NOTES:

THE FOLLOWING CONDITIONS SHALL APPLY AT LOCATIONS WHERE CONSTRUCTION INTERFERES WITH EXISTING CITY OF BEVERLY HILLS TRAFFIC SIGNAL PULLBOXES, CONDUITS, DETECTOR LOOPS, OR OTHER EQUIPMENT.

1. MATERIALS AND INSTALLATION SHALL, EXCEPT AS OTHERWISE STATED OR PROVIDED HEREWITH, CONFORM TO THE LATEST EDITION AND SUPPLEMENTS OF THE STANDARD SPECIFICATIONS FOR PUBLIC WORKS CONSTRUCTION "GREEN BOOK" ADOPTED BY THE CITY OF BEVERLY HILLS AND THE LATEST EDITION OF THE CITY OF BEVERLY HILLS SPECIAL PROVISIONS AND STANDARD DRAWINGS FOR THE INSTALLATION AND MODIFICATION OF TRAFFIC SIGNALS.

2. THE CITY OF BEVERLY HILLS TRAFFIC SIGNAL SUPERVISOR RENATO TALAVERA, TELEPHONE (310) 285-2467 SHALL BE NOTIFIED THREE (3) WORKING DAYS PRIOR TO BEGINNING CONSTRUCTION.

3. TRAFFIC SIGNAL CONTROL SHALL BE MAINTAINED AT ALL TIMES. FLASHING, SHUTDOWN, OR TURN ON OF SIGNALS SHALL BE ACCOMPLISHED ONLY BY A CITY OF BEVERLY HILLS TRAFFIC SIGNAL ELECTRICIAN. ARRANGEMENTS FOR ALL SHUTDOWNS SHALL BE MADE 1 WEEK PRIOR TO START OF ANY CONSTRUCTION BY CONTACTING THE CITY OF BEVERLY HILLS TRAFFIC SIGNAL SUPERVISOR RENATO TALAVERA AT (310) 285-2467.

4. THE CONTRACTOR SHALL MAINTAIN ALL EXISTING CITY OF BEVERLY HILLS TRAFFIC SIGNS. CONTACT THE CITY OF BEVERLY HILLS TRAFFIC SIGNAL SUPERVISOR RENATO TALAVERA AT (310) 285-2467, THREE (3) WORKING DAYS PRIOR TO CONSTRUCTION FOR REMOVAL OR REINSTALLATION OF SIGNS, ANY SIGNS LOST OR DAMAGED BY THE CONTRACTOR SHALL BE REPLACED AT THE CONTRACTOR'S EXPENSE.

5. TRAFFIC SIGNAL EQUIPMENT (POLES, CONDUITS, PULLBOXES, LOOPS) INTERFERING WITH CONSTRUCTION MAY BE RELOCATED ONLY WITH PRIOR APPROVAL BY CITY OF BEVERLY HILLS. IN THE EVENT OF DAMAGE TO TRAFFIC SIGNAL EQUIPMENT, THE CONTRACTOR SHALL IMMEDIATELY NOTIFY THE CITY OF BEVERLY HILLS TRAFFIC SIGNAL SUPERVISOR RENATO TALAVERA AT (310) 285-2467 AND SHALL BE RESPONSIBLE FOR IMMEDIATE REPAIR/REPLACEMENT AT NO COST TO THE CITY. REPAIRED OR REPLACED TRAFFIC SIGNAL EQUIPMENT SHALL BE INSPECTED BY THE TRAFFIC SIGNAL INSPECTOR BEFORE CIRCUITS ARE ENERGIZED.

6. IN THE EVENT OF DAMAGE TO EXISTING TRAFFIC SIGNAL EQUIPMENT CONDUIT OR DETECTOR LOOPS, THE CONTRACTOR SHALL IMMEDIATELY NOTIFY THE CITY OF BEVERLY HILLS TRAFFIC SIGNAL SUPERVISOR RENATO TALAVERA AT (310) 285-2467, AND SHALL BE RESPONSIBLE FOR REPAIR OR REPLACEMENT AT NO COST TO THE CITY WITHIN 48 HOURS. REPAIRED OR REPLACED EQUIPMENT/CONDUIT SHALL BE INSPECTED BY THE TRAFFIC SIGNAL INSPECTOR BEFORE SIGNAL CIRCUIT ARE ENERGIZED.

7. IF THE METHOD OF CONSTRUCTION INTERFERES WITH ADEQUATE VISIBILITY OF THE VEHICLE AND/OR THE PEDESTRIAN SIGNAL HEADS AT THEIR EXISTING LOCATIONS, THE CONTRACTOR SHALL PREPARE TEMPORARY AND RESTORATION TRAFFIC SIGNAL PLANS IN SUPPORT OF THE TRAFFIC CONTROL PLAN. NECESSARY TRAFFIC SIGNAL PLANS SHALL BE PREPARED BY A LICENSED CIVIL/TRAFFIC ENGINEER REGISTERED IN THE STATE OF CALIFORNIA AND SUBMITTED TO CITY OF BEVERLY HILLS VIA THE PROJECT ENGINEER FOR APPROVAL PRIOR TO START OF CONSTRUCTION. THE CONTRACTOR SHALL BE RESPONSIBLE FOR REMOVAL AND INSTALLATION OF TEMPORARY AND PERMANENT TRAFFIC SIGNAL EQUIPMENT.

8. THE LOCATION OF EXISTING TRAFFIC SIGNAL CONDUIT AND CITY OF BEVERLY HILLS FIBER CONDUIT SHOWN ON THE PLANS ARE APPROXIMATE ONLY. THE CONTRACTOR SHALL DETERMINE THE EXACT LOCATION AND DEPTH OF EACH CONDUIT WITHIN THE ROADWAY IN AT LEAST ONE LOCATION, AT THE DEEPEST POINT OF EXCAVATION, PRIOR TO COMMENCING CONSTRUCTION.

9. ALL WORK MUST BE PERFORMED BY A LICENSED CONTRACTOR EXPERIENCED IN TRAFFIC SIGNAL CONSTRUCTION.

10. CITY OF BEVERLY HILLS WILL INSTALL, REMOVE AND/OR COVER PARKING METER HEADS AS APPROPRIATE. THE CONTRACTOR SHALL BE RESPONSIBLE FOR REMOVING THE PARKING METER POSTS AFFECTED BY CONSTRUCTION ONLY AFTER THE PARKING METER HEADS HAVE BEEN REMOVED BY CITY CREWS. THE CONTRACTOR SHALL CONTACT THE CITY OF BEVERLY HILLS AT (310) 285-2467, 10 WORKING DAYS PRIOR TO PARKING METER REMOVAL.

WORKSITE TRAFFIC CONTROL PLANS:

1. SEE TC SERIES TRAFFIC CONTROL PLANS FOR ADDITIONAL NOTES.

COMPLIANCE WITH THE GENERAL PERMIT FOR DISCHARGES ASSOCIATED WITH CONSTRUCTION ACTIVITIES:

1. MINIMUM WATER QUALITY PROTECTION REQUIREMENTS INCLUDE:
   A. ERODED SEDIMENTS AND POLLUTANTS MUST BE RETAINED ON SITE AND MAY NOT BE TRANSPORTED FROM THE SITE VIA STREET FLOW, SWALES, AREA DRAINS. NATURAL DRAINAGE COURSE OR WIND.
   B. STOCKPILES OF EARTH AND OTHER CONSTRUCTION-RELATED MATERIALS MUST BE PROTECTED FROM BEING TRANSPORTED FROM THE SITE BY WIND OR WATER.
   C. FUELS, OILS, SOLVENTS AND OTHER TOXIC MATERIALS MUST BE STORED IN ACCORDANCE WITH THEIR LISTING AND ARE NOT TO CONTAMINATE THE SOIL NOR THE SURFACE WATERS. ALL APPROVED TOXIC STORAGE CONTAINERS ARE TO BE PROTECTED FROM THE WEATHER. SPILLS MUST BE CLEANED UP IMMEDIATELY AND DISPOSED OF IN A PROPER MANNER. SPILLS MAY NOT BE WASHED INTO THE DRAINAGE SYSTEM.
   D. NON-STORM WATER RUNOFF FROM THE EQUIPMENT AND VEHICLE WASHING AND ANY OTHER ACTIVITY SHALL BE CONTAINED AT THE PROJECT SITE AND LEGALLY AND PROPERLY DISPOSED OFFSITE.
   E. EXCESS OR WASTE CONCRETE MAY NOT BE WASHED INTO THE PUBLIC WAY OR ANY DRAINAGE SYSTEM. PROVISIONS SHALL BE MADE TO RETAIN CONCRETE WASTES ON-SITE UNTIL THEY CAN BE APPROPRIATELY DISPOSED OF OR RECYCLED.
   F. TRASH AND CONSTRUCTION-RELATED SOLID WASTES MUST BE DEPOSITED INTO A COVERED RECEPTACLE TO PREVENT CONTAMINATION OF RAINWATER AND DISPERSAL BY WIND.
   G. SEDIMENTS AND OTHER MATERIALS MAY NOT BE TRACKED FROM THE SITE BY VEHICLE TRAFFIC. THE CONSTRUCTION ENTRANCE ROADWAYS MUST BE STABILIZED SO AS TO INHIBIT SEDIMENTS FROM BEING DEPOSITED INTO THE PUBLIC WAYS. ACCIDENTAL DEPOSITIONS MUST BE SWEPT UP IMMEDIATELY AND MAY NOT BE WASHED DOWN BY RAIN OR BY ANY MEANS.
   H. ALL NEW AND EXISTING STORM DRAIN SYSTEM STRUCTURES MUST BE PROTECTED FROM SEDIMENTATION AND CONCRETE RINSE OR OTHER CONSTRUCTION RELATED DEBRIS AND DISCHARGES WITH GRAVEL OF SAND BAGS. ACCUMULATED DEBRIS MUST BE CLEANED UP AND PROPERLY DISPOSED OF TO PREVENT THE MATERIALS FROM ENTERING OR BEING CARRIED INTO STORMWATER CONVEYANCES PER APPROVED CONSTRUCTION SWPPP.
   I. AFTER THE COMPLETION OF THE WORK, THE WORK SITE MUST BE CLEARED OF DEBRIS AND RESTORED TO A CONDITION EQUAL TO OR BETTER THAN THAT EXISTING BEFORE CONSTRUCTION.

2. WET WEATHER EROSION CONTROL PLAN (WWECP):
   A. WHENEVER THE CONSTRUCTION SITE WILL HAVE GRADING BETWEEN OCTOBER 1 AND APRIL 15, THE CONTRACTOR SHALL SUBMIT A WWECP TO THE CITY PROJECT MANAGER FOR APPROVAL WITHIN 30 DAYS AFTER AWARD OF CONTRACT OR GET APPROVAL 30 DAYS PRIOR TO THE BEGINNING OF THE RAINY SEASON, WHICHEVER IS LONGER.
   B. GUIDANCE ON PREPARING THE WWECP CAN BE FOUND IN THE STORMWATER BEST MANAGEMENT PRACTICE DESIGN AND MAINTENANCE MANUAL. DOWNLOADED AT WWW.DPW.LACOUNTY.GOV/DES/DESIGN_MANUALS/.

3. STORM WATER POLLUTION PREVENTION PLAN (SWPPP):
   A. THE CONTRACTOR SHALL FILE A "NOTICE OF INTENT" ONCE WITH THE STATE WATER RESOURCES CONTROL BOARD TO COMPLY WITH THE CALIFORNIA GENERAL CONSTRUCTION ACTIVITY STORMWATER PERMIT AND PREPARE AND IMPLEMENT A STORMWATER POLLUTION PREVENTION PLAN (SWPPP). THE CONTRACTOR SHALL COMPLY WITH THE CONSTRUCTION STORM WATER POLLUTION PREVENTION PLAN (SWPPP) THAT THE CONTRACTOR HAS PREPARED USING A QUALIFIED STORMWATER DEVELOPED (QSD) AND SUBMITTED THROUGH "SWQCB SMARTS" SYSTEM. SWPPP REQUIRES APPROVAL BY ENGINEERS REPRESENTATIVE PRIOR TO SUBMITTING TO SMARTS. ALL CONSTRUCTION SWPPP ACTIVITIES ARE TO BE MONITORED BY A QUALIFIED STORMWATER PRACTITIONER (QSP) AND A COPY OF THE APPROVED SWPPP IS TO BE KEPT ONSITE IN FIELD TRAILER OR WORK TRUCKS. WHENEVER THE CONTRACTOR IS REQUIRED TO GET ANY TYPE OF PERMIT FROM THE CITY OF BEVERLY HILLS PUBLIC WORKS DEPARTMENT, THE CONTRACTOR SHALL SHOW A WASTE DISCHARGE IDENTIFICATION NUMBER (WDID) TO PUBLIC WORKS AS PROOF OF SUBMITTAL OF THE NOI. IF THE CONTRACTOR DOES NOT NEED ANY TYPE OF PERMIT FROM THE PUBLIC WORKS DEPARTMENTS, THE CONTRACTOR SHALL SHOW THE WDID TO THE CITY OFFICIALS.
   B. THE PHYSICAL CHARACTERISTICS OF THE PROJECT SITE, THE PLANNED SITE IMPROVEMENTS, AND THE MEANS, METHODS, AND SEQUENCE OF WORK SELECTED BY THE CONTRACTOR MAY AFFECT THE QUALITY OF STORM WATER DISCHARGES FROM THE SITE, BOTH DURING AND AFTER CONSTRUCTION ACTIVITY. ACCORDINGLY, THE SWPPP FOR THE PROJECT SHALL REQUIRE IMPLEMENTATION OF POLLUTANT CONTROL PRACTICES AT THREE LEVELS: 1) SPECIFIC MANDATORY PRACTICES THAT MUST BE IMPLEMENTED AS SPECIFIED; 2) ALTERNATIVE MANDATORY PRACTICES WHERE THE CONTRACTOR SELECTS FROM LISTED PRACTICES THE ALTERNATIVE THAT BEST FIT THE MEANS, METHODS, AND SEQUENCE OF WORK; AND 3) PRACTICES WHERE THE CONTRACTOR SELECTS THE CONTROL PRACTICES THAT BEST FIT THE MEANS, METHODS, AND SEQUENCE OF WORK SO AS TO CONTROL POLLUTANTS IN A MANNER CONSISTENT WITH THE GENERAL PERMIT.
   C. CONTRACTOR SHALL ASSUME SOLE, COMPLETE, AND CONTINUOUS RESPONSIBILITY FOR THE CONDITIONS AT THE JOB SITE DURING CONSTRUCTION, SHALL FULLY COMPLY WITH ALL REQUIREMENTS, TERMS, AND CONDITIONS IN THE NOI GENERAL PERMIT AND SHALL IMPLEMENT THE SWPPP.
   D. METRO RETAINS THE RIGHTS AND POWERS TO EFFECT PROMPT CORRECTIVE ACTION UPON FAILURE BY THE CONTRACTOR TO COMPLY WITH ANY REQUIREMENTS, TERMS, OR CONDITIONS IN THE NOI, GENERAL PERMIT, OR SWPPP HOWEVER, THE CITY'S RETAINING OF THESE RIGHTS DOES NOT OBLIGATE METRO TO EFFECT SAID CORRECTIVE ACTION OR TO NOTIFY CONTRACTOR THAT CORRECTIVE ACTION IS REQUIRED. NOR DOES IT RELIEVE THE CONTRACTOR FROM THE FULL RESPONSIBILITY TO COMPLY. CONDITIONS OF NON-COMPLIANCE DUE TO ANY ACTION OR INACTION OF ANY SUBCONTRACTOR, MATERIAL SUPPLIER, PROVIDER OF SERVICE, OR WORKER ON THE ACCOUNT OF THE CONTRACTOR SHALL BE CONSIDERED A FAILURE BY THE CONTRACTOR TO COMPLY.
   1

COMPLIANCE WITH THE GENERAL PERMIT FOR DISCHARGES ASSOCIATED WITH CONSTRUCTION ACTIVITIES:

(CONTINUED)

   E. CONTRACTOR SHALL DESIGNATE IN WRITING THE NAME AND TELEPHONE NUMBER OF THE PERSON RESPONSIBLE FOR IMPLEMENTING THE SWPPP. THE DESIGNATED PERSON SHALL BE AVAILABLE 24 HOURS PER DAY, SEVEN DAYS PER WEEK AND SHALL HAVE THE AUTHORITY TO RESPOND TO STORM WATER POLLUTION ISSUES AND TO IMPLEMENT CORRECTIVE AND PREVENTATIVE MEASURES AS REQUIRED. THE DESIGNATED PERSON AND THE TELEPHONE NUMBER SHALL BECOME PART OF THE SWPPP, A DOCUMENT AVAILABLE TO THE PUBLIC.
   1

C1056 AUR CONTRACT DRAWING NO. G-251

PROJECT: BEVERLY HILLS
WESTSIDE SUBWAY EXTENSION
ADVANCED UTILITY RELOCATIONS
WILSHIRE / LA CIENEGA STATION
GENERAL NOTES
SHEET 2 OF 2

Metro
PARSONS BRINCKERHOFF

LOS ANGELES COUNTY
METROPOLITAN TRANSPORTATION AUTHORITY
777 SOUTH FIGUEROA ST. 11TH FLOOR
LOS ANGELES, CA 90017
PREPARED UNDER THE SUPERVISION OF:
NAME: ZAFER MUDAR LIC. # C64154; EXPIRES 12/31/14 DATE

REGISTERED PROFESSIONAL ENGINEER ZAFER MUDAR No. C64154 EXPIRES: 12/31/2014 CIVIL STATE OF CALIFORNIA

SCALE: NONE
F.B. NO. F.B.NO. PAGE -- TO --

DESIGNED	Z. MUDAR	DATE	02/07/14
DRAWN	R. NACION	DATE	02/07/14
CHECKED	N. HUMBY	DATE	02/07/14

DATE	DESCRIPTION	BY	REV
4/3/14	AMENDMENT 3	ZM	1
2/21/14	ISSUED FOR SOLICITATION	ZM	0

SUBMITTED ________ DATE ________
APPROVED ________ CITY ENGINEER DATE ________

JOB NO. 1335
DRAWING NO. 7443
SHEET 7 OF 172 SHEET

CITY OF BEVERLY HILLS, CALIFORNIA
CIVIL ENGINEERING DEPARTMENT

DWG filename: L:\LAWSBIM\WACBM\CADD\12_UTILITIES\CITYOFBH\BHNOTES\C1056G251.DWG Plot Date & Time: 4/1/2014 2:47:57 PM Plotted by: Nacion,Roque

WATER GENERAL NOTES:

SPECIFICATIONS:

1. CONTRACTOR OR ITS SUBCONTRACTOR PERFORMING THE WATER RELOCATION WORK MUST CONDUCT ALL WATER LINE CONSTRUCTION AND WORKMANSHIP IN ACCORDANCE WITH THE LATEST EDITION AND SUPPLEMENTS OF THE STANDARD SPECIFICATIONS AND PLANS FOR PUBLIC WORKS CONSTRUCTION (SSPWC) "GREEN BOOK" AND THE LATEST EDITION OF THE CITY OF BEVERLY HILLS STANDARD PLANS AND SPECIFICATIONS AND ITS APPLICABLE SPECIAL PROVISIONS AND STANDARD DRAWINGS, AMERICAN WATERWORKS ASSOCIATION STANDARDS, APPENDIX C AND APPENDIX D OF C1056 CONTRACT SPECIFICATIONS AND ALL OTHER CONTRACTUAL REQUIREMENTS. THE CONTRACTOR SHALL HAVE A CURRENT COPY OF THE WATER SERVICES STANDARD SPECIFICATIONS AT THE JOB SITE AT ALL TIMES. (1)

2. PRIOR TO START OF CONSTRUCTION, CONTRACTOR SHALL FIELD CONFIRM BY POT HOLING THE BEARING AND ELEVATION OF THE EXISTING WATER LINES BEING RELOCATED AND ADJUST NEW PIPE LENGTH AND FITTINGS AS APPROPRIATE TO MAKE CONNECTION. IF FIELD CONFIRMATION SHOWS DESIGN CONFLICT, CONTRACTOR SHALL SUBMIT THE POT HOLING AND ANY OTHER RELATED INFORMATION TO ENGINEERS REPRESENTATIVE AND THE CITY OF BEVERLY HILLS FOR CLARIFICATION.

3. CONTRACTOR SHALL POTHOLE ALL UTILITIES WITHIN 3 FT OF CONSTRUCTION ZONE WHETHER SHOWN OR NOT SHOWN ON THESE PLANS.

4. COST OF POT HOLING SPECIFIED HEREIN, ELSEWHERE ON THESE PLANS AND/OR REQUIRED BY THE PERMITTING AGENCIES SHALL BE INCLUDED IN THE CONTRACTOR BID PRICE.

5. DIMENSIONS AS SHOWN ON THESE PLANS DO NOT PROVIDE EXACT LENGTHS OF THE PIPE SEGMENTS DUE TO VERTICAL COMPONENT. THE CONTRACTOR SHALL PERFORM INDEPENDENT FIELD VERIFICATION AND ADJUST PIPE LENGTHS AS REQUIRED TO MEET THE INTENT OF THE WATERLINE RELOCATION MODIFICATIONS. ANY DISCREPANCY REQUIRING CLARIFICATION SHALL BE SUBMITTED TO THE ENGINEER'S REPRESENTATIVE DURING THE BID PERIOD. ANY REQUEST FOR ADDITIONAL COST DUE TO FAILURE OF THE CONTRACTOR TO PERFORM INDEPENDENT QUANTITY CALCULATIONS WILL NOT ACCEPTED.

6. CONTRACTOR TO RETURN ANY SALVAGEABLE PARTS, INCLUDING BUT NOT LIMITED TO OLD FIRE HYDRANTS AND OLD WATER METER VALVES TO CITY OF BEVERLY HILLS AS DIRECTED BY CITY INSPECTORS OR METRO'S AUTHORIZED REPRESENTATIVE.

7. CONTRACTOR TO PREPARE PHASING PLAN FOR ALL WATER LINE RELOCATION SERVICE CONNECTIONS AND OBTAIN METRO'S AUTHORIZED REPRESENTATIVE AND CITY OF BEVERLY HILLS APPROVAL.

8. ALL PIPES ABANDONED AS PART OF NEW CONSTRUCTION SHALL BE END-CAPPED AND SEALED PER GREEN BOOK SPEC 306-6.

9. CONTRACTOR TO FIELD VERIFY ALL SERVICE CONNECTIONS AND RECONNECT ANY SERVICE CONNECTION THAT MAY NOT BE SHOWN ON PLANS.

10. CONTRACTOR IS TO NOTIFY CUSTOMERS OF ANY SERVICE DISRUPTIONS AND IMPACTS TO THEIR PLUMBING DUE TO WATER METER RELOCATIONS AND SERVICE RECONNECTIONS 15 AN 1 DAY PRIOR TO START OF CONSTRUCTION (1)

11. ALL MATERIALS USED ON THIS PROJECT SHALL BE APPROVED BY THE CITY OF BEVERLY HILLS.

12. VERIFY LOCATION OF DRIVEWAYS, CURB RAMPS, AND ANY ABOVE GROUND FACILITIES IN THE FIELD PRIOR TO INSTALLATION OF FIRE HYDRANTS AND METER BOXES.

13. PIPE IN UNDERGROUND STATION AREA AS SHOWN ON PLANS TO BE BURIED UNTIL TEMPORARY DECKING IS CONSTRUCTED IN-PLACE. MAXIMUM ELAPSED TIME UNTIL DECK COMPLETION SHALL NOT EXCEED 24 MONTHS, THEREFORE NO CATHODIC PROTECTION IS REQUIRED FOR SUSPENDED PIPE PORTIONS OF THE WATER RELOCATIONS SHOWN ON THESE PLANS.

14. TEMPORARY PILES, DECKING AND EXCAVATION IS TO BE PERFORMED UNDER A SEPARATE CONTRACT BY THE DESIGNATED CONTRACTOR AND IS NOT A PART OF THESE PLANS. CONSTRUCTION METHODS FOR PILE INSTALLATION AND DECK CONSTRUCTION TO BE SUBMITTED SEPARATELY BY CONTRACTOR.

15. PAVEMENT THICKNESS SHALL BE CONSTRUCTED PER COBH STD DWG BH114.

16. PROVIDE CONCRETE BLANKET PER APWA STD DWG 225-2 FOR CROSSING PIPES WHEN VERTICAL CLEARANCE IS LESS THAN 18 INCHES.

NOTICE TO CONTRACTORS - STL. & D.I. PIPE

1. ALL WORK DETAILED ON THESE PLANS, EXCEPT AS OTHERWISE STATED OR PROVIDED FOR HEREON, SHALL BE CONSTRUCTED IN ACCORDANCE WITH STANDARD SPECIFICATIONS INCLUDED AS APPENDIX C AND STANDARD SPECIFICATION D-101 INCLUDED AS APPENDIX D IN CONTRACT SPECIFICATIONS. THE "STANDARD SPECIFICATIONS FOR PUBLIC WORKS CONSTRUCTION" 2009 EDITION, AS LAST REVISED; AND STANDARD PLANS REFERRED TO THEREIN.

2. THE CONTRACTOR SHALL COMPLY WITH ALL CONDITIONS OR REQUIREMENTS OF PERMITS APPLICABLE TO THIS PROJECT.

3. ALL MATERIAL EQUIPMENT, AND CONSTRUCTION WILL BE SUBJECT TO CONTINUOUS INSPECTION BY METRO

4. THE CONTRACTOR SHALL CONTACT THE WATER SERVICES REPRESENTATIVE THROUGH METRO AT 310-285-1141 TO ARRANGE FOR A PRECONSTRUCTION MEETING TO BE HELD AT LEAST TWO WEEKS PRIOR TO THE ANTICIPATED START OF CONSTRUCTION AND NO SOONER THAN TWO WEEKS AFTER APPROVAL OF THIS PLAN.

5. THE CONTRACTOR SHALL BE RESPONSIBLE FOR IDENTIFYING AND LOCATING ALL SUBSTRUCTURES THAT MAY AFFECT THIS INSTALLATION IN ACCORDANCE WITH SECTION 2.07A OF D-101, IN APPENDIX D OF CONTRACT SPECIFICATIONS.

6. THE LOCATION OF ALL FITTINGS WILL BE VERIFIED AND APPROVED IN THE FIELD BY THE METRO INSPECTOR PRIOR TO INSTALLATION.

7. BEDDING SHALL BE PLACED IN ACCORDANCE WITH SECTION 2.08 OF D-101 IN APPENDIX D OF CONTRACT SPECIFICATIONS AND AS DETAILED ON DWPWS STANDARD DRAWING A9435.

NOTICE TO CONTRACTORS - STL. & D.I. PIPE (cont.)

8. ALL FITTING SUBJECTED TO AN UNBALANCED HYDROSTATIC FORCE SHALL BE RESTRAINED WITH 2000 PSI CONCRETE THRUST BLOCKS BEARING AGAINST UNDISTURBED SOIL. IN ADDITION, D.I. FITTINGS AND ADJACENT 60 LINEAR FEET SHALL BE RESTRAINED WITH LOCK-JOINT GASKETS (U.S. PIPE "FIELD LOCK" OR EQUIVALENT) OR YOKES AND RODS WHERE APPLICABLE, AND ALL FLEXIBLE STEEL PIPE JOINTS SHALL BE RESTRAINED WITH ANCHOR BOXES.

9. DUCTILE IRON PIPE AND APPURTENANCES SHALL BE ENCASED IN 8-MIL CLEAR POLYETHYLENE FILM TUBES.

10. THE CONTRACTOR SHALL LOCATE AND INSTALL ALL SERVICES AND METER BOXES REQUIRED FOR THIS INSTALLATION. METER BOXES SHALL BE LOCATED IN FRONT OF THE PROPERTY BEING SERVED AND A MINIMUM OF 4 FEET OUTSIDE THE TOP OF THE DRIVEWAY "X". SERVICE LATERALS SHALL BE LOCATED NO CLOSER THAN 3 FEET FROM OTHER UTILITIES.

11. ALL PIPE JOINTS FITTED WITH LOCK-JOINT GASKETS SHALL HAVE A 6-INCH WIDE BAND PAINTED ON THE TOP PORTION OF BELL WITH "SAFETY-PRECAUTION BLUE" PAINT TO THE SATISFACTION OF THE METRO/COBH INSPECTOR.

12. UNLESS OTHERWISE NOTED HEREON, TAPPING OF EXISTING STEEL OR C.I./D.I. MAINS SHALL BE MADE BY A COBH-APPROVED TAPPING CONTRACTOR WHO SHALL INSTALL AND TEST THE FLANGED OUTLET THE TAPPING SLEEVE PRIOR TO TAPPING THE MAIN.

13. A CATHODIC PROTECTION SYSTEM SHALL BE INSTALLED IN ACCORDANCE WITH THIS PLAN, AND AS SHOWN ON SHEET 65.
14. INSTALLATION SHALL COMPLY WITH CITY OF BEVERLY HILLS RULES AND REGULATIONS.

15. A SERVICE CONNECTION TO PREMISES SHALL NOT BE USED TO SUPPLY ADJOINING PREMISES OF A DIFFERENT OWNER OR TO SUPPLY THE PREMISES OF THE SAME OWNER WHICH IS ON THE OPPOSITE SIDE OF A PUBLIC STREET OR ALLEY. ADDITIONALLY, SAID SERVICE LINES SHALL NOT CROSS PUBLIC STREETS OR ALLEYS TO SUPPLY IRRIGATION TO MEDIAN, STREETSCAPE OR OPEN SPACE AREAS. (1)

16. ALL DISTANCE TO FITTINGS AS INDICATED ON THESE PLANS ARE MEASURE ALONG THE PIPE.

17. CONTRACTOR IS REQUIRED TO ESTABLISH ALL TIMES AND DURATIONS OF ANY WATER SERVICE SHUT-DOWN DISRUPTIONS BASED ON THE PROJECT'S MANDATED PHASING PRIOR TO COMMENCING WORK. ADDITIONALLY, CONTRACTOR MAY BE REQUIRED TO PROVIDE SIDE-LINING TO MAINTAIN CUSTOMER'S SERVICES AFFECTED BY SAID SHUT-DOWNS.

SHUTDOWN PLAN REQUIREMENTS:

1. WATER SERVICE TO CUSTOMERS SHALL BE MAINTAINED CONTINUOUSLY THROUGHOUT CONSTRUCTION OF THE PROJECT. ALL CITY OF BEVERLY HILLS CUSTOMERS ARE REQUIRED TO BE ACCOMMODATED DURING PLANNED WATER OUTAGES BY THE CONTRACTOR. OUTAGES SHALL MINIMIZE IMPACTS TO CUSTOMERS BY SCHEDULING THEM DURING OFF PEAK HOURS, INCLUDING NIGHT TIME CONSTRUCTION, PROVIDING BOTTLE WATER AND TEMPORARY FACILITIES, COMPENSATION FOR LOSS OF BUSINESS, AND MAY ALSO INCLUDE CONTINUOUS TEMPORARY POTABLE WATER SUPPLY AT A MINIMUM OF 40 PSI PRESSURE THROUGHOUT THE OUTAGE. HIGHER PRESSURES MAY BE REQUIRED TO CUSTOMERS FOR PROCESS PURPOSES, FIRE SERVICES AND HYDRANTS. DESIGN OF THE TEMPORARY WATER SUPPLY SYSTEM SHALL BE PRESSURE TESTED AND DISINFECTED PRIOR TO BEING PLACED IN SERVICE. INPUT ON THE ACCOMMODATION IS BASED ON CUSTOMERS AND CITY OF BEVERLY HILLS. CUSTOMERS SHALL BE INDIVIDUALLY NOTIFIED IN WRITING A MINIMUM OF TWO WORKING DAYS IN ADVANCE OF WATER OUTAGES.

2. THE CONTRACTOR IS TO SUBMIT A SHUTDOWN PLAN FOR THE PLANNED WATER OUTAGE TO CITY OF BEVERLY HILLS FOR APPROVAL.

3. THE CONTRACTOR SHALL PROVIDE IDENTIFICATION OF ALL PERSONNEL PERFORMING WORK. THIS INCLUDES SUBCONTRACTOR(S), FOREMAN(MEN), WELDER(S), EMERGENCY BACK-UP(S). WELDER(S) MUST BE PRE-APPROVED IN ACCORDANCE WITH THE PROJECT SPECIFICATIONS.

4. THE CONTRACTOR SHALL FURNISH A DETAILED SHUTDOWN SCHEDULE. THIS LIST SHALL INCLUDE A CLEAR SEQUENCE OF EVENTS WITH START AND END TIMES OF ACTIVITIES. DETAILS FOR EACH TASK INVOLVED IN THE SHUTDOWN SHALL ALSO BE INCLUDED. PERSONNEL'S SHIFT SCHEDULE SHALL ALSO BE PROVIDED. PLEASE NOTE THAT THE CITY OF BEVERLY HILLS MAY IMPOSE A TIME LIMITATION IF SCHEDULE DEEMED A WORKER SAFETY HAZARD. SHUTDOWN SCHEDULE IS SUBJECT TO APPROVAL BY THE CITY OF BEVERLY HILLS WATER DEPARTMENT. SHUTDOWN MAY, AT ANY TIME, BE CANCELLED BASED ON THE CITY OF BEVERLY HILLS WATER OPERATION NEEDS.

5. THE CONTRACTOR SHALL MAKE AVAILABLE TO THE CITY OF BEVERLY HILLS THE FOLLOWING: APPROVED SHORING PLANS (WITH CALCULATIONS), APPROVED WORKSITE TRAFFIC PLANS, AND ANALYSIS OF PROPOSED VALVE CLOSURES. VALVE CLOSURE ANALYSIS MUST PROVIDE SAFE WORKING CONDITIONS. VALVE RESTRAINT DETAILS SHALL ALSO BE PROVIDED WHERE APPLICABLE/NECESSARY.

6. THE CONTRACTOR SHALL PROVIDE PROOF, BY WAY OF VISUAL INSPECTION BY A CITY OF BEVERLY HILLS INSPECTOR, THAT ALL MATERIAL FOR THE PROPOSED SHUTDOWN IS IN THE CONTRACTOR'S POSSESSION. ALL EQUIPMENT PROPOSED FOR USE DURING THE SHUTDOWN MUST ALSO BE PROVIDED. THIS LIST SHALL INCLUDE DETAILS SUCH AS, BUT NOT LIMITED TO, PUMP SIZE/TYPE FOR DEWATERING AND TYPE/SIZE OF CONSTRUCTION EQUIPMENT TO BE USED.

7. THE CONTRACTOR SHALL FURNISH, UPON REQUEST, ALL PERMITS REQUIRED FOR CONSTRUCTION. THIS INCLUDES, AS APPLICABLE, UTILITY PERMITS, NPDS DISCHARGE PERMITS, SWPPP, AND OTHER PERMITS REQUIRED FOR CONSTRUCTION.

8. THE CONTRACTOR SHALL FURNISH A DETAILED CUSTOMER MITIGATION SUMMARY. THIS LIST SHALL INCLUDE, CUSTOMERS/BUSINESSES AFFECTED BY THE SHUTDOWN AND A DESCRIPTION OF PROPOSED ACCOMMODATION FOR EACH CUSTOMER/BUSINESS. A CITY OF BEVERLY HILLS INSPECTOR MUST BE PRESENT DURING ACCOMMODATION DISCUSSIONS WITH THE CUSTOMERS/BUSINESSES AFFECTED. PLEASE NOTE THAT ALL CUSTOMERS/BUSINESS AFFECTED MUST BE SATISFIED WITH THE ACCOMMODATION PLANS PROPOSED PRIOR TO COMMENCEMENT OF ANY WORK.

9. A COMPLETE SHUTDOWN SUBMITTAL PACKAGE, WHICH INCLUDES ALL ITEMS LISTED ABOVE, MUST BE SUBMITTED TO THE CITY OF BEVERLY HILLS AT LEAST 4 WEEKS PRIOR TO SCHEDULED WORK.

10. THE CONTRACTOR SHALL TAKE NOTE THAT ADDITIONAL INFORMATION AND/OR SUBMITTALS MAY BE REQUIRED SUBJECT TO SPECIFIC PROJECT PARAMETERS.

Metro

LOS ANGELES COUNTY
METROPOLITAN TRANSPORTATION AUTHORITY

PARSONS BRINCKERHOFF

777 SOUTH FIGUEROA ST. 11TH FLOOR
LOS ANGELES, CA 90017
PREPARED UNDER THE SUPERVISION OF:

NAME: ZAFER MUDAR LIC. # C64154; EXPIRES 12/31/14 DATE

REGISTERED PROFESSIONAL ENGINEER ZAFER MUDAR No. C64154 EXPIRES: 12/31/2014 CIVIL STATE OF CALIFORNIA

SCALE: NONE
F.B. NO. F.B.NO. PAGE -- TO --

DESIGNED	Z. MUDAR	DATE	02/07/14
DRAWN	R. NACION	DATE	02/07/14
CHECKED	N. HUMBY	DATE	02/07/14

DATE	DESCRIPTION	BY	REV
4/3/14	AMENDMENT 3	ZM	1
2/21/14	ISSUED FOR SOLICITATION	ZM	0

C1056 AUR CONTRACT DRAWING NO. G-253

PROJECT: BEVERLY HILLS
WESTSIDE SUBWAY EXTENSION
ADVANCED UTILITY RELOCATIONS

WILSHIRE / LA CIENEGA STATION
WATER GENERAL NOTES

SUBMITTED ______ DATE ______
APPROVED ______ CITY ENGINEER DATE ______

JOB NO. 1335
DRAWING NO. 7443
SHEET 9 OF 172 SHEET

CITY OF BEVERLY HILLS, CALIFORNIA
CIVIL ENGINEERING DEPARTMENT

DWG filename: L:\LAWSBIM\WACBM\CADD\12_UTILITIES\CITYOFBH\BHNOTES\C1056G253.DWG Plot Date & Time: 4/1/2014 2:48:07 PM Plotted by: Nacion,Roque

HORIZONTAL AND VERTICAL LOCATIONS TO BE VERIFIED IN THE FIELD AND ENGINEER NOTIFIED OF ANY DISCREPANCIES PRIOR TO CONSTRUCTION.

ABBREVIATIONS:

BH =CITY OF BEVERLY HILLS
EX =EXISTING
J.C. =JUNCTION CHAMBER
N.I.C. =NOT IN CONTRACT
PROP. =PROPOSED

SEWER CONSTRUCTION KEYNOTES:

(1) CONNECT TO EXISTING BHSS MANHOLE. FIELD VERIFY EXIST. INVERT ELEVATIONS.

(2) REMODEL EXISTING BHSS MANHOLE CHANNEL. PER GREEN BOOK SPEC SECTION 306-6 AND DETAIL "B" ON SHEET 34..

(3) CONSTRUCT TEMP. TRAFFIC RATED 8" C.O. ASSY W/CAST IRON FRAME AND LID PER DETAIL ON SHEET 41. ADJUST FRAME TO EXIST ROADWAY GRADE.

(4) CONSTRUCT TEMP. 6" HDPE SEWER LATERAL (H.C.) PER TYPICAL CONNECTION DETAIL ON SHEET 34 AND PROFILE ON SHEETS 35-40.

(5) ABANDON EXIST MANHOLE IN PLACE AS IS.

(9) ABANDON EXISTING BHSS PER GREEN BOOK SPEC SECTION 306-5.

(10) ABANDON EXISTING BHSS PIPE IN PLACE AS IS.

(12) FIELD VERIFY AND EXPOSE EXIST. 6 D.U. SCE DUCT IN 20" STL CASING DETERMINE ELEVATIONS AND FORWARD TO METRO'S AUTHORIZED REPRESENTATIVE PRIOR TO CONSTRUCTING SANITARY SEWER LINE "A" AND LINE "D".

(14) CONTRACTOR SHALL DECOMISSION EXISTING STORM DRAIN LINE BEFORE INSTALLING THIS PORTION OF BHSS LINE "A".

PROFILE
LINE "A"

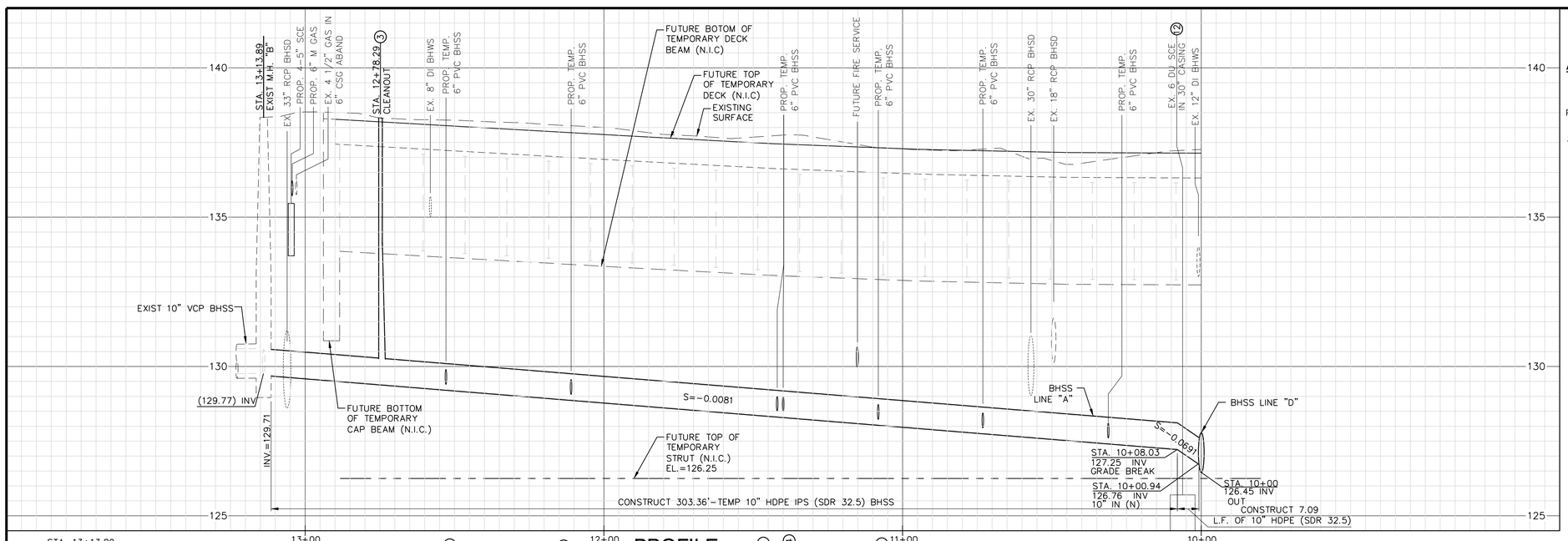

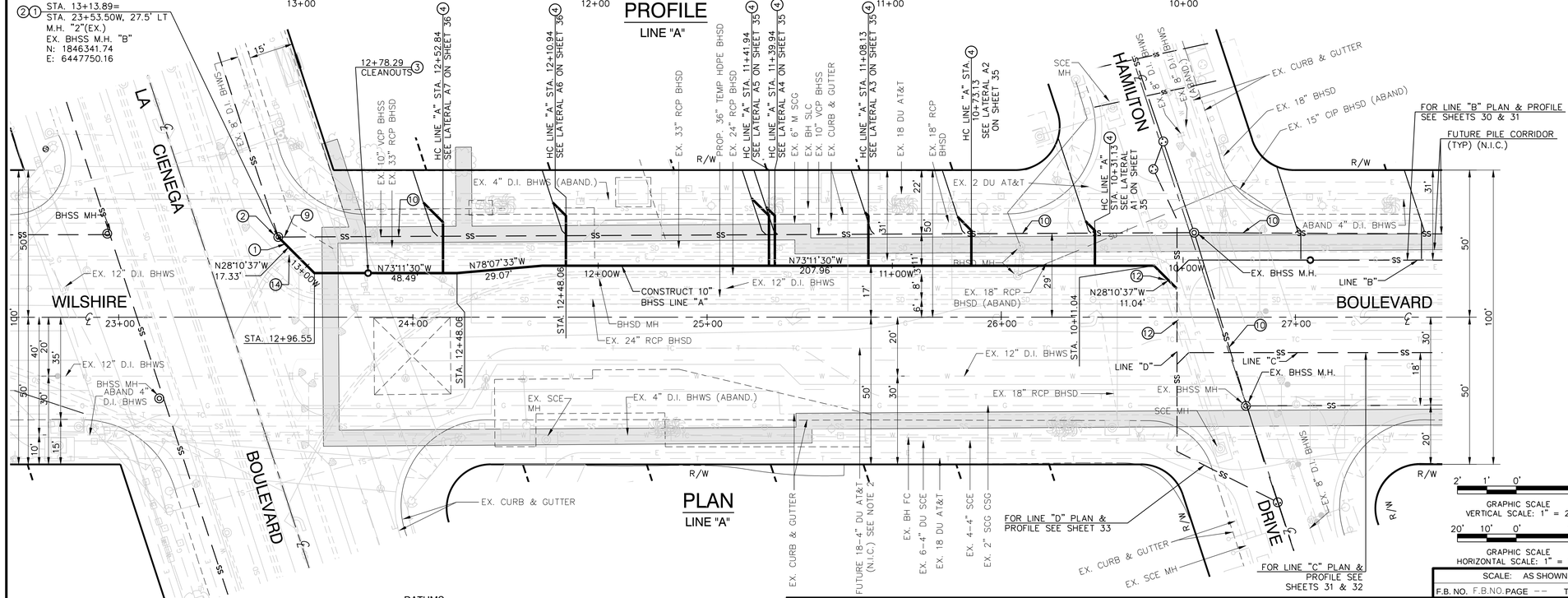

PLAN
LINE "A"

GRAPHIC SCALE VERTICAL SCALE: 1" = 2'
GRAPHIC SCALE HORIZONTAL SCALE: 1" = 20'

NOTES:

1. TO BE CONSTRUCTED PER C1056 ADVANCED UTILITY RELOCATIONS CONTRACT PACKAGE.
2. C1056 CONTRACTOR TO VERIFY STATUS OF UTILITY RELOCATIONS WITH (1) THE OWNER.

DATUMS:

THE BASIS OF HORIZONTAL CONTROL FOR THIS PROJECT IS THE CALIFORNIA COORDINATE SYSTEM NAD83 ZONE 5 (2007.0 EPOCH) DETERMINED LOCALLY BY THE FOLLOWING NGS POINTS: EW9587, EW9595 AND AA9327

ELEVATIONS ARE BASED ON THE NAVD 1988 - SPECIFICALLY CITY OF LOS ANGELES BENCHMARKS 12-16091, 13-13450 AND 13-13352 (2000 ADJ)

C1056 AUR CONTRACT DRAWING NO. UC-101

Metro
LOS ANGELES COUNTY METROPOLITAN TRANSPORTATION AUTHORITY
777 SOUTH FIGUEROA ST. 11TH FLOOR
LOS ANGELES, CA 90017

PARSONS BRINCKERHOFF
PREPARED UNDER THE SUPERVISION OF:
NAME: ZAFER MUDAR LIC. # C64154; EXPIRES 12/31/14 DATE

REGISTERED PROFESSIONAL ENGINEER ZAFER MUDAR No. C64154 EXPIRES: 12/31/2014 CIVIL STATE OF CALIFORNIA

DATE	DESCRIPTION	BY	REV
4/3/14	AMENDMENT 3	ZM	1
2/21/14	ISSUED FOR SOLICITATION	ZM	0

SCALE: AS SHOWN
F.B. NO. F.B.NO.PAGE -- TO --
DESIGNED G. MUNSON DATE 02/07/14
DRAWN R. NACION DATE 02/07/14
CHECKED Z. MUDAR DATE 02/07/14

PROJECT:
BEVERLY HILLS
WESTSIDE SUBWAY EXTENSION
ADVANCED UTILITY RELOCATIONS
WILSHIRE / LA CIENEGA STATION
TEMPORARY SEWER RELOCATION
LINE "A" PLAN AND PROFILE
STA 10+00.00 TO STA 13+13.89

SUBMITTED DATE
APPROVED DATE
CITY ENGINEER

JOB NO. 1335
DRAWING NO. 7443
SHEET 28 OF 172 SHEET

CITY OF BEVERLY HILLS, CALIFORNIA
CIVIL ENGINEERING DEPARTMENT

Plotted by: Nacion,Roque
Plot Date & Time: 4/1/2014 2:48:31 PM
File Name: C:\LAWSHM\WORK\CADD\12_UTILITIES\UTIL\BH\BHSEWER\PLANS & PROFILES\UC1056UC101.DWG

HORIZONTAL AND VERTICAL LOCATIONS TO BE VERIFIED IN THE FIELD AND ENGINEER NOTIFIED OF ANY DISCREPANCIES PRIOR TO CONSTRUCTION.

ABBREVIATIONS:

BH =CITY OF BEVERLY HILLS
EX =EXISTING
J.C. =JUNCTION CHAMBER
N.I.C. =NOT IN CONTRACT
PROP. =PROPOSED

SEWER CONSTRUCTION KEYNOTES:

(3) CONSTRUCT TRAFFIC RATED TEMP. 8" C.O. ASSY W/CAST IRON FRAME AND LID PER DETAIL ON SHEET 40. ADJUST FRAME TO EXIST ROADWAY GRADE.

(4) CONSTRUCT TEMP 6" HDPE SEWER LATERAL (H.C.) PROFILE DETAIL ON SHEET 34.

(5) ABANDON EXISTING MANHOLE. IN PLACE AS IS.

(9) ABANDON EXISTING BHSS PER GREEN BOOK SPEC. SECTION 306-5.

(10) ABANDON EXISTING BHSS PIPE IN PLACE AS IS.

PROFILE
LINE "B"

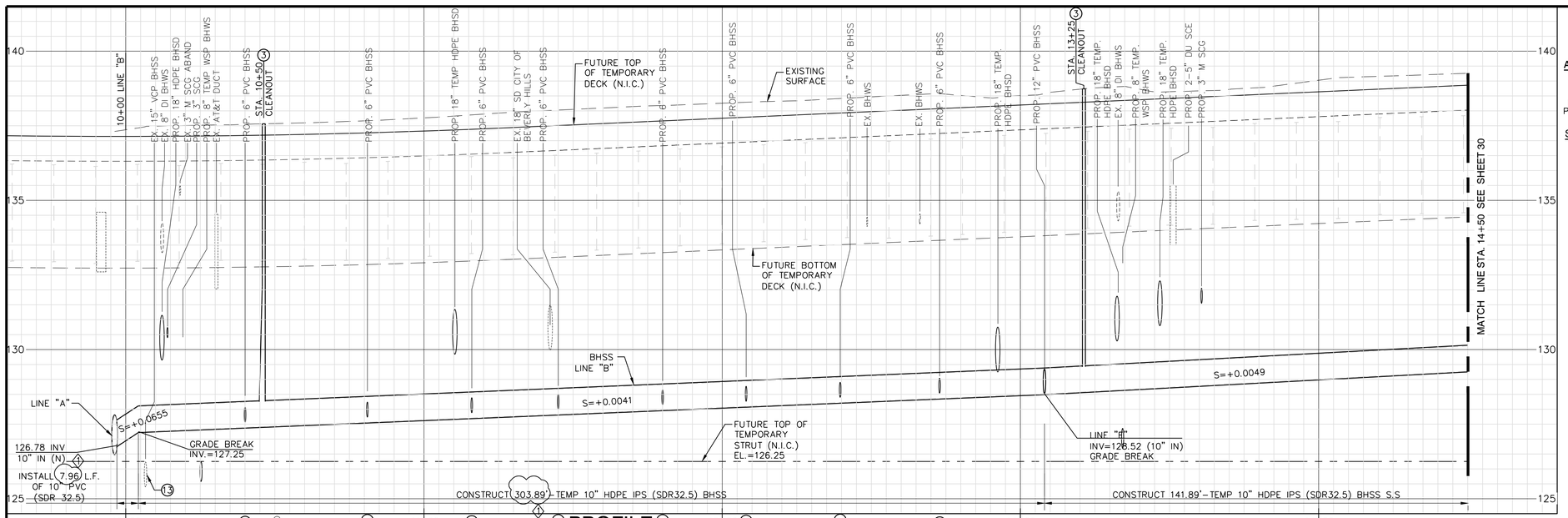

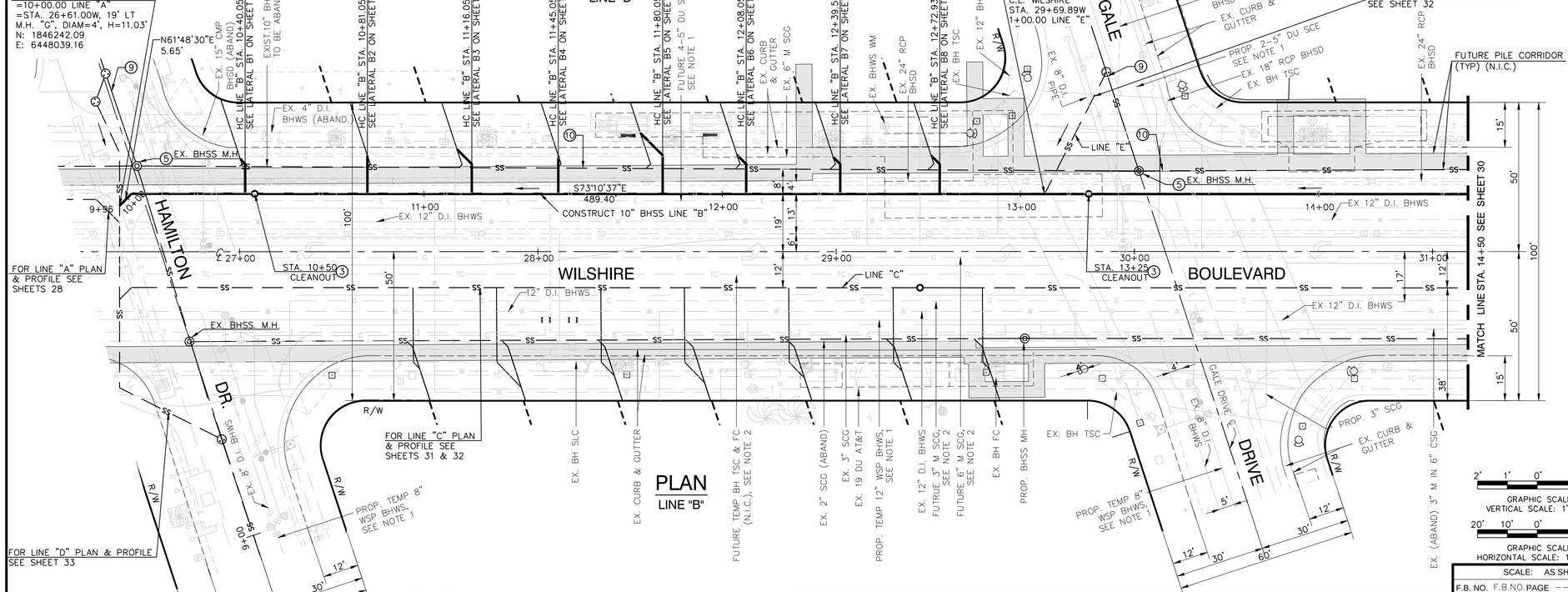

PLAN
LINE "B"

DATUMS:

THE BASIS OF HORIZONTAL CONTROL FOR THIS PROJECT IS THE CALIFORNIA COORDINATE SYSTEM NAD83 ZONE 5 (2007.0 EPOCH) DETERMINED LOCALLY BY THE FOLLOWING NGS POINTS: EW9587, EW9595 AND AA9327

ELEVATIONS ARE BASED ON THE NAVD 1988 – SPECIFICALLY CITY OF LOS ANGELES BENCHMARKS 12-16091, 13-13450 AND 13-13352 (2000 ADJ)

NOTES:

1. TO BE CONSTRUCTED PER C1056 ADVANCED UTILITY RELOCATIONS CONTRACT PACKAGE.
2. C1056 CONTRACTOR TO VERIFY STATUS OF UTILITY RELOCATIONS WITH THE OWNER.

GRAPHIC SCALE VERTICAL SCALE: 1" = 2'
GRAPHIC SCALE HORIZONTAL SCALE: 1" = 20'

C1056 AUR CONTRACT DRAWING NO. UC-102

Metro
PARSONS BRINCKERHOFF

LOS ANGELES COUNTY
METROPOLITAN TRANSPORTATION AUTHORITY
777 SOUTH FIGUEROA ST. 11TH FLOOR
LOS ANGELES, CA 90017

PREPARED UNDER THE SUPERVISION OF:

NAME: ZAFER MUDAR LIC. # C64154; EXPIRES 12/31/14 DATE

REGISTERED PROFESSIONAL ENGINEER ZAFER MUDAR No. C64154 EXPIRES: 12/31/2014 CIVIL STATE OF CALIFORNIA

PROJECT: BEVERLY HILLS
WESTSIDE SUBWAY EXTENSION
ADVANCED UTILITY RELOCATIONS
WILSHIRE / LA CIENEGA STATION
TEMPORARY SEWER RELOCATION
LINE "B" PLAN AND PROFILE
STA 9+96.29 TO STA 14+50.00

SCALE: AS SHOWN
F.B. NO. F.B.NO.PAGE -- TO --

DESIGNED	G. MUNSON	DATE 02/07/14
DRAWN	R. NACION	DATE 02/07/14
CHECKED	Z. MUDAR	DATE 02/07/14

SUBMITTED _____ DATE _____
APPROVED _____ DATE _____
CITY ENGINEER

JOB NO. 1335 DRAWING NO. 7443
SHEET 29 OF 172 SHEET

CITY OF BEVERLY HILLS, CALIFORNIA
CIVIL ENGINEERING DEPARTMENT

DATE	DESCRIPTION	BY	REV
4/3/14	AMENDMENT 3	ZM	1
2/21/14	ISSUED FOR SOLICITATION	ZM	0

W:\Hasp Hasp\Projects\Beverly_Hills\Task_Orders\Preliminary_Engineering\Plan_Sets\Line_B\Plan_Profile\C1056UC102.dwg Plot Date & Time: 4/1/2014 - 2:48:41 PM Plotted by: Nacion,Roque

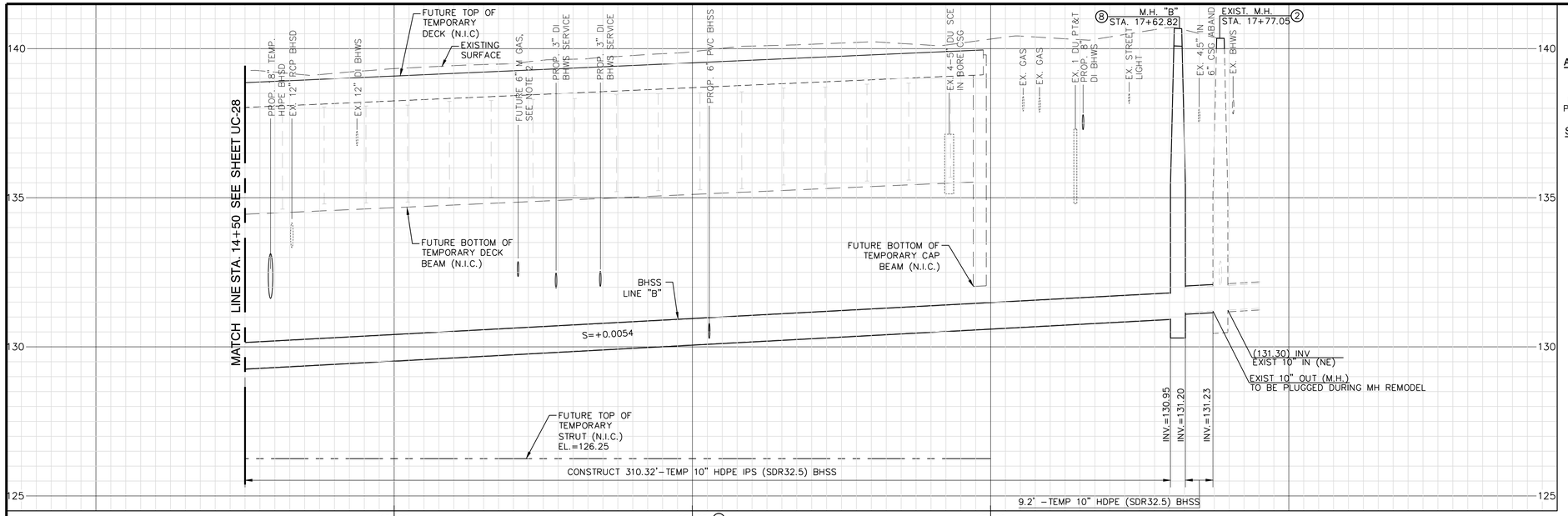

PROFILE
LINE "B"

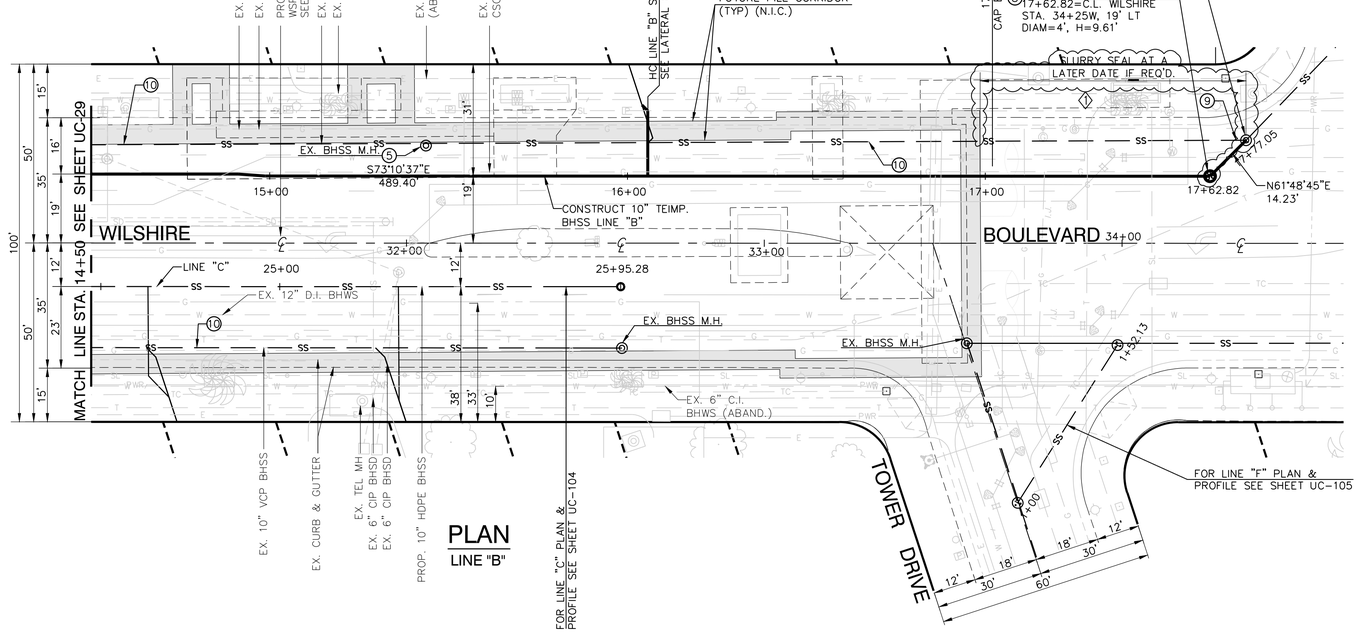

PLAN
LINE "B"

HORIZONTAL AND VERTICAL LOCATIONS TO BE VERIFIED IN THE FIELD AND ENGINEER NOTIFIED OF ANY DISCREPANCIES PRIOR TO CONSTRUCTION.

ABBREVIATIONS:

BH	=CITY OF BEVERLY HILLS
EX	=EXISTING
J.C.	=JUNCTION CHAMBER
N.I.C.	=NOT IN CONTRACT
PROP.	=PROPOSED

SEWER CONSTRUCTION KEYNOTES:

(2) REMODEL EXISTING BHSS MANHOLE CHANNEL, PER GREEN BOOK SPEC SECTION 306-6 AND DETAIL "C" ON SHEET 34.

(4) CONSTRUCT TEMP 6" HDPE SEWER LATERAL (H.C.) PER TYPICAL CONNECTION DETAIL ON SHEET 34 AND PROFILE ON SHEET 38.

(5) ABANDON EXISTING M.H. IN PLACE AS IS.

(8) CONSTRUCT BHSS M.H. "B" PER STD. DETAIL BH 202.

(9) ABANDON EXISTING BHSS PER GREEN BOOK SPEC SECTION 306-5.

(10) ABANDON EXISTING BHSS PIPE IN PLACE AS IS.

DATUMS:

THE BASIS OF HORIZONTAL CONTROL FOR THIS PROJECT IS THE CALIFORNIA COORDINATE SYSTEM NAD83 ZONE 5 (2007.0 EPOCH) DETERMINED LOCALLY BY THE FOLLOWING NGS POINTS: EW9587, EW9595 AND AA9327

ELEVATIONS ARE BASED ON THE NAVD 1988 – SPECIFICALLY CITY OF LOS ANGELES BENCHMARKS 12-16091, 13-13450 AND 13-13352 (2000 ADJ)

NOTES:

1. TO BE CONSTRUCTED PER C1056 ADVANCED UTILITY RELOCATIONS CONTRACT PACKAGE.
2. C1056 CONTRACTOR TO VERIFY STATUS OF UTILITY RELOCATIONS WITH THE OWNER.

* TO BE VERIFIED WITH COBH

C1056 AUR CONTRACT DRAWING NO. UC-103

GRAPHIC SCALE VERTICAL SCALE: 1" = 2'

GRAPHIC SCALE HORIZONTAL SCALE: 1" = 20'

Metro

PARSONS BRINCKERHOFF

LOS ANGELES COUNTY METROPOLITAN TRANSPORTATION AUTHORITY

777 SOUTH FIGUEROA ST. 11TH FLOOR
LOS ANGELES, CA 90017

PREPARED UNDER THE SUPERVISION OF:

NAME: ZAFER MUDAR LIC. # C64154; EXPIRES 12/31/14 DATE

REGISTERED PROFESSIONAL ENGINEER ZAFER MUDAR No. C64154 EXPIRES: 12/31/2014 CIVIL STATE OF CALIFORNIA

DATE	DESCRIPTION	BY	REV
4/3/14	AMENDMENT 3	ZM	1
2/21/14	ISSUED FOR SOLICITATION	ZM	0

SCALE: AS SHOWN

F.B. NO. F.B.NO. PAGE -- TO --

DESIGNED G. MUNSON DATE 02/07/14
DRAWN R. NACION DATE 02/07/14
CHECKED Z. MUDAR DATE 02/07/14

PROJECT:
BEVERLY HILLS
WESTSIDE SUBWAY EXTENSION
ADVANCED UTILITY RELOCATIONS
WILSHIRE / LA CIENEGA STATION
TEMPORARY SEWER RELOCATION
LINE "B" PLAN AND PROFILE
STA 14+50.00 TO STA 17+77.05

SUBMITTED _____ DATE _____

APPROVED _____ DATE _____
CITY ENGINEER

JOB NO. 1335

DRAWING NO. 7443

SHEET 30 OF 172 SHEET

CITY OF BEVERLY HILLS, CALIFORNIA
CIVIL ENGINEERING DEPARTMENT

Plot Date & Time: 4/1/2014 2:48:46 PM Plotted by: Nacion,Roque

XRefs: L:\LAWSBM WA\CBA\CADD\12_UTILITIES\10TO9BHJBHSSMEP\PLANS & PROFILES\C1056UC103.DWG

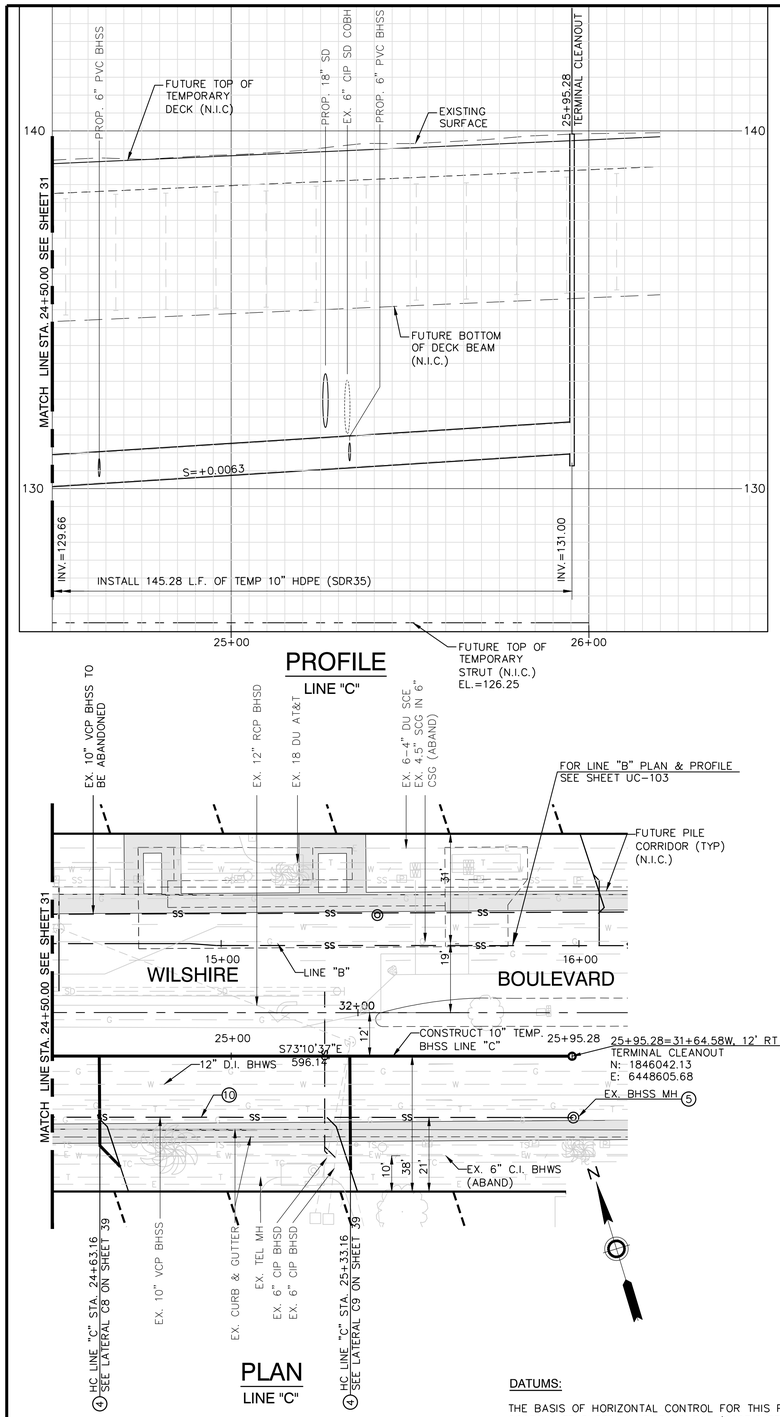

PROFILE
LINE "C"

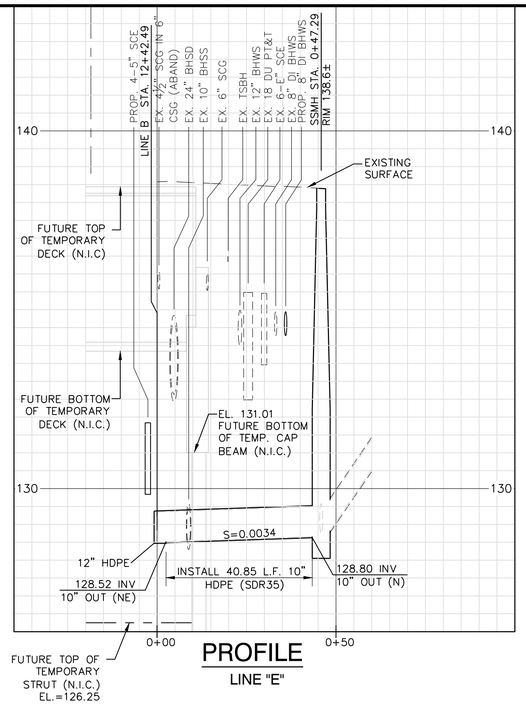

PROFILE
LINE "E"

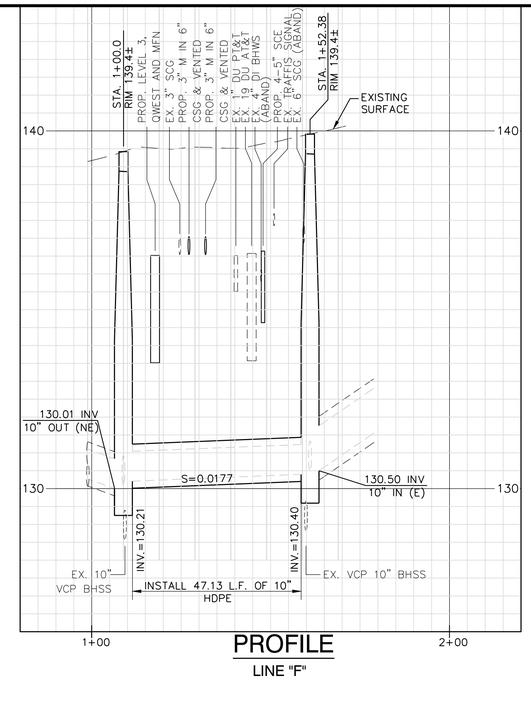

PROFILE
LINE "F"

HORIZONTAL AND VERTICAL LOCATIONS TO BE VERIFIED IN THE FIELD AND ENGINEER NOTIFIED OF ANY DISCREPANCIES PRIOR TO CONSTRUCTION.

ABBREVIATIONS:

BH	=CITY OF BEVERLY HILLS
EX	=EXISTING
J.C.	=JUNCTION CHAMBER
N.I.C.	=NOT IN CONTRACT
PROP.	=PROPOSED

SEWER CONSTRUCTION KEYNOTES:

(3) CONSTRUCT TEMP. TRAFFIC RATED 8" C.O. ASSY W/CAST IRON FRAME AND LID PER DETAIL ON SHEET 41. ADJUST FRAME TO EXIST ROADWAY GRADE.

(5) ABANDON EXIST MANHOLE IN PLACE AS IS.

(8) CONSTRUCT BHSS MH "B" PER STD. DETAIL BH 202.

(9) ABANDON EXISTING BHSS PER GREEN BOOK SPEC SECTION 306-5.

(10) ABANDON EXISTING BHSS PIPE IN PLACE AS IS.

(11) ABANDON EXISTING BHSS IN PLACE. SLURRY FILL ABANDONED LINE WITH SAND SLURRY PER GREEN BOOK SPEC SECTIONS 201-6.

PLAN
LINE "C"

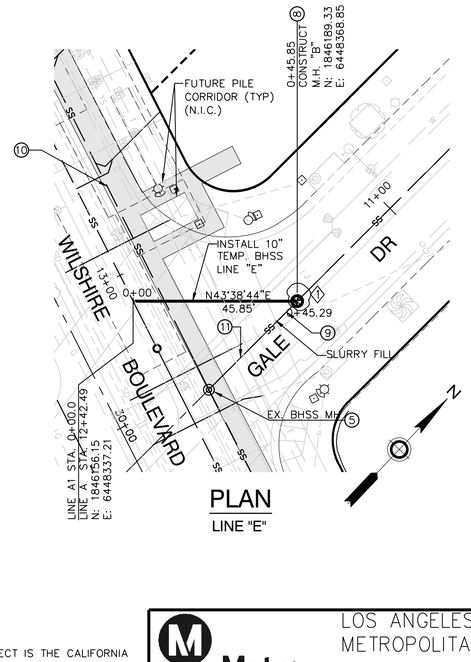

PLAN
LINE "E"

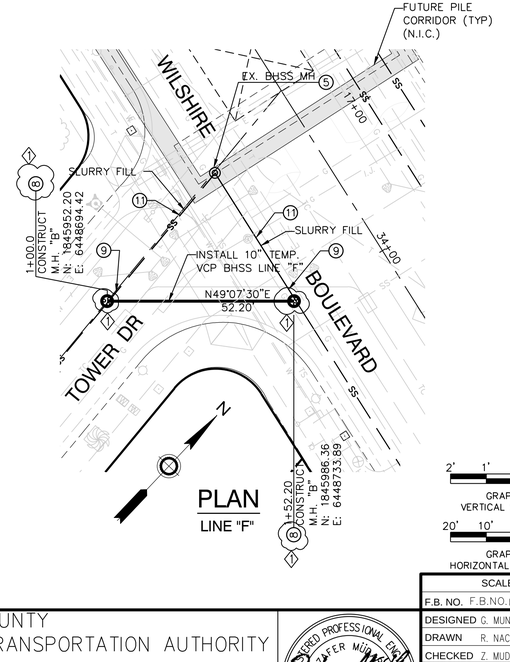

PLAN
LINE "F"

NOTES:

1. TO BE CONSTRUCTED PER C1056 ADVANCED UTILITY RELOCATIONS CONTRACT PACKAGE.
2. C1056 CONTRACTOR TO VERIFY STATUS OF UTILITY RELOCATIONS WITH THE OWNER.

C1056 AUR CONTRACT DRAWING NO. UC-105

DATUMS:

THE BASIS OF HORIZONTAL CONTROL FOR THIS PROJECT IS THE CALIFORNIA COORDINATE SYSTEM NAD83 ZONE 5 (2007.0 EPOCH) DETERMINED LOCALLY BY THE FOLLOWING NGS POINTS: EW9587, EW9595 AND AA9327

ELEVATIONS ARE BASED ON THE NAVD 1988 – SPECIFICALLY CITY OF LOS ANGELES BENCHMARKS 12-16091, 13-13450 AND 13-13352 (2000 ADJ)

2' 1' 0' 2'
GRAPHIC SCALE VERTICAL SCALE: 1" = 2'

20' 10' 0' 20'
GRAPHIC SCALE HORIZONTAL SCALE: 1" = 20'

Metro
LOS ANGELES COUNTY METROPOLITAN TRANSPORTATION AUTHORITY
777 SOUTH FIGUEROA ST. 11TH FLOOR
LOS ANGELES, CA 90017

PARSONS BRINCKERHOFF
PREPARED UNDER THE SUPERVISION OF:
NAME: ZAFER MUDAR LIC. # C64154; EXPIRES 12/31/14 DATE

REGISTERED PROFESSIONAL ENGINEER
ZAFER MUDAR
No. C64154
EXPIRES: 12/31/2014
CIVIL
STATE OF CALIFORNIA

SCALE: AS SHOWN			
F.B. NO. F.B.NO.PAGE -- TO --			
DESIGNED G. MUNSON	DATE 02/07/14		
DRAWN R. NACION	DATE 02/07/14		
CHECKED Z. MUDAR	DATE 02/07/14		
4/3/14	AMENDMENT 3	ZM	1
2/21/14	ISSUED FOR SOLICITATION	ZM	0
DATE	DESCRIPTION	BY	REV

SUBMITTED _____ DATE _____

APPROVED _____ DATE _____
CITY ENGINEER

PROJECT:
BEVERLY HILLS
WESTSIDE SUBWAY EXTENSION
ADVANCED UTILITY RELOCATIONS
WILSHIRE / LA CIENEGA STATION
TEMPORARY SEWER RELOCATION
PLAN AND PROFILES
LINE "C" STA 24+50 TO STA 25+95.29, LINE "E", & LINE "F"

JOB NO. 1335 DRAWING NO. 7443
SHEET 32 OF 172 SHEET

CITY OF BEVERLY HILLS, CALIFORNIA
CIVIL ENGINEERING DEPARTMENT

W:\C~1\design\...\C1056UC105.DWG Plot Date & time: 4/7/2014 2:49:00 PM Plotted by: Nacion,Roque

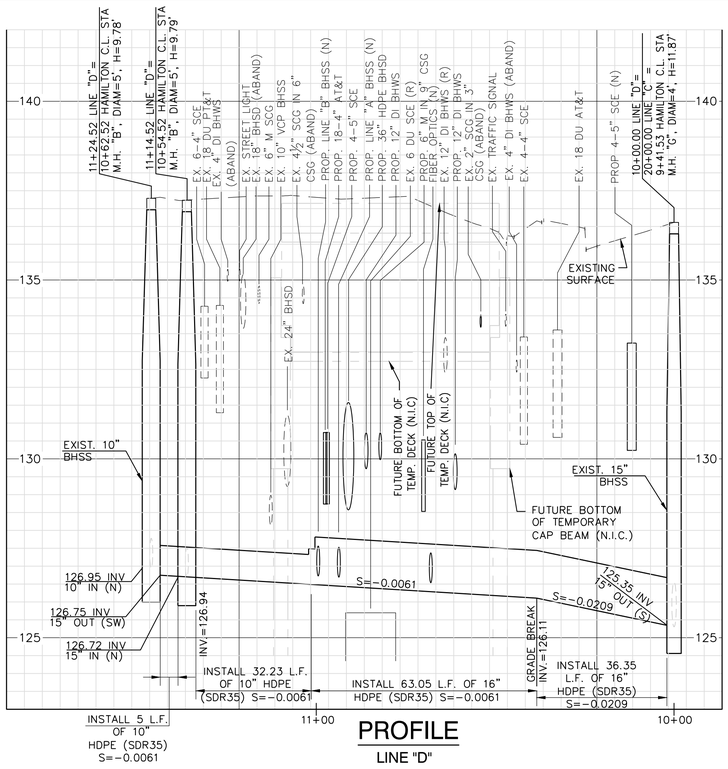

PROFILE
LINE "D"

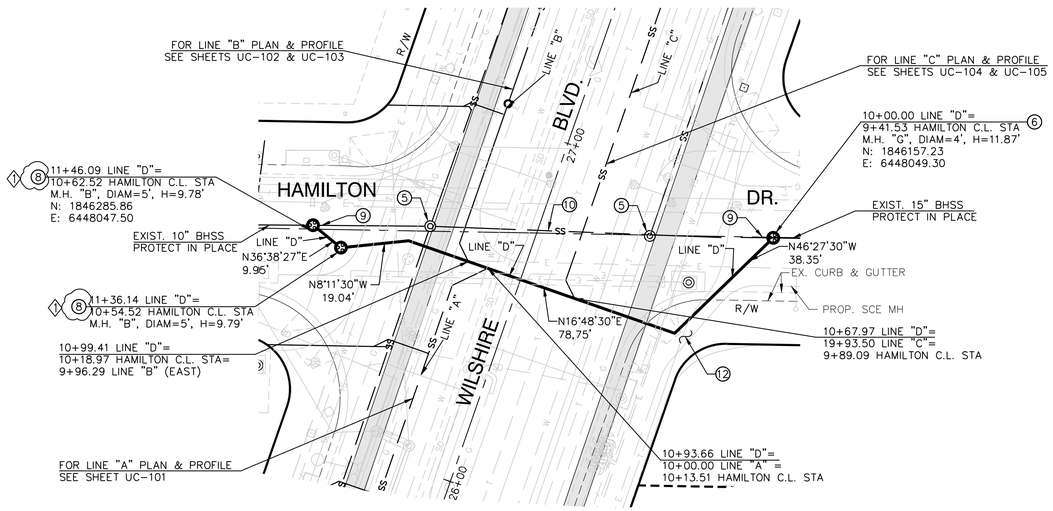

PLAN
LINE "D"

HORIZONTAL AND VERTICAL LOCATIONS TO BE VERIFIED IN THE FIELD AND ENGINEER NOTIFIED OF ANY DISCREPANCIES PRIOR TO CONSTRUCTION.

ABBREVIATIONS:

BH	=CITY OF BEVERLY HILLS
EX	=EXISTING
J.C.	=JUNCTION CHAMBER
N.I.C.	=NOT IN CONTRACT
PROP.	=PROPOSED

SEWER CONSTRUCTION KEYNOTES:

(5) ABANDON EXIST MANHOLE IN PLACE AS IS.

(6) CONSTRUCT SEWER MANHOLE PER STD. DETAIL BH 204.

(8) CONSTRUCT BHSS M.H. "B" PER STD. DETAIL BH 202 (1)

(9) ABANDON EXISTING BHSS AS PER GREEN BOOK SPEC SECTION 306-5.

(10) ABANDON EXISTING BHSS PIPE IN PLACE AS IS.

(12) COORDINATE WITH METRO. PUBLIC OUTREACH 60 DAYS BEFORE COSTRUCTION AT OR AROUND THE SIDEWALK. (1)

NOTES:

1. TO BE CONSTRUCTED PER C1056 ADVANCED UTILITY RELOCATIONS CONTRACT PACKAGE.
2. C1056 CONTRACTOR TO VERIFY STATUS OF UTILITY RELOCATIONS WITH THE OWNER.

* TO BE VERIFIED WITH COBH

DATUMS:

THE BASIS OF HORIZONTAL CONTROL FOR THIS PROJECT IS THE CALIFORNIA COORDINATE SYSTEM NAD83 ZONE 5 (2007.0 EPOCH) DETERMINED LOCALLY BY THE FOLLOWING NGS POINTS: EW9587, EW9595 AND AA9327

ELEVATIONS ARE BASED ON THE NAVD 1988 – SPECIFICALLY CITY OF LOS ANGELES BENCHMARKS 12-16091, 13-13450 AND 13-13352 (2000 ADJ)

N

2' 1' 0' 2'
GRAPHIC SCALE
VERTICAL SCALE: 1" = 2'

20' 10' 0' 20'
GRAPHIC SCALE
HORIZONTAL SCALE: 1" = 20'

C1056 AUR CONTRACT DRAWING NO. UC-106

PROJECT:
BEVERLY HILLS
WESTSIDE SUBWAY EXTENSION
ADVANCED UTILITY RELOCATIONS
WILSHIRE / LA CIENEGA STATION
TEMPORARY SEWER RELOCATION
LINE "D" PLAN AND PROFILE
STA 10+00.00 TO STA 11+46.09

Metro
LOS ANGELES COUNTY
METROPOLITAN TRANSPORTATION AUTHORITY
777 SOUTH FIGUEROA ST. 11TH FLOOR
LOS ANGELES, CA 90017

PARSONS BRINCKERHOFF
PREPARED UNDER THE SUPERVISION OF:
NAME: ZAFER MUDAR LIC. # C64154; EXPIRES 12/31/14 DATE

REGISTERED PROFESSIONAL ENGINEER
ZAFER MUDAR
No. C64154
EXPIRES: 12/31/2014
CIVIL
STATE OF CALIFORNIA

SCALE: AS SHOWN

F.B. NO.	F.B.NO.PAGE --	TO --	
DESIGNED	G. MUNSON	DATE	02/07/14
DRAWN	R. NACION	DATE	02/07/14
CHECKED	Z. MUDAR	DATE	02/07/14

DATE	DESCRIPTION	BY	REV
4/3/14	AMENDMENT 3	ZM	1
2/21/14	ISSUED FOR SOLICITATION	ZM	0

SUBMITTED _____ DATE _____
APPROVED _____ DATE _____
CITY ENGINEER

JOB NO. 1335
DRAWING NO. 7443
SHEET 33 OF 172 SHEET

CITY OF BEVERLY HILLS, CALIFORNIA
CIVIL ENGINEERING DEPARTMENT

Plot Date & Time: 4/1/2014 2:49:07 PM
Plotted by: Nacion,Roque
L:\LAWSBIM\WACBM\CADD\Y22_UTILITIES\UTILITIES\BHSEWER\PLANS & PROFILES\UC1056UC106.DWG
Xrefs: titleone

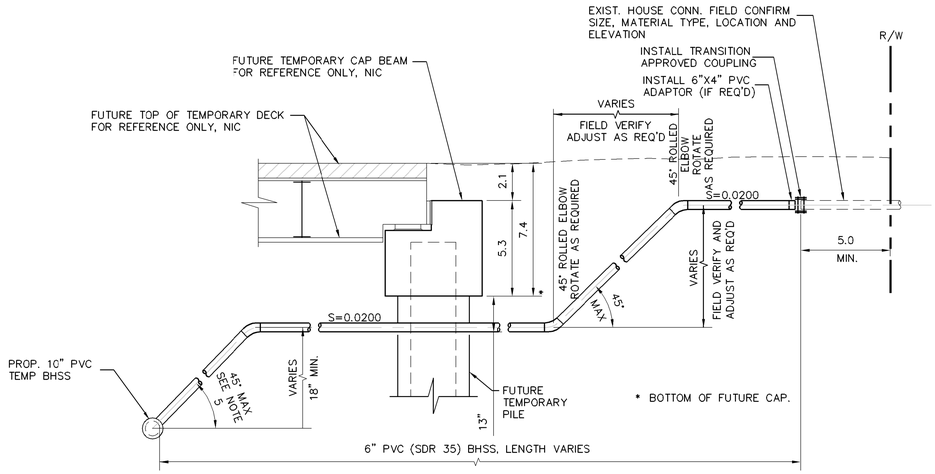

TYPICAL TEMPORARY HDPE BHSS HOUSE CONNECTION DETAIL "A"
NTS

NOTES FOR TYPICAL HOUSE CONNECTION SEWERS:

1. CHANGES FROM ONE TYPE OF MATERIAL OR SIZE TO ANOTHER SHALL BE MADE ONLY BY MEANS OF SUITABLE ADAPTERS AS SHOWN IN STANDARD DETAIL OR APPROVED BY THE ENGINEER.
2. THE UPPER END OF THE HOUSE CONNECTION SHALL BE SEALED BY INSTALLING A CAP AND SEALING THE CAP WITH ½" THICK TYPE "F" MORTAR AROUND THE CIRCUMFERENCE OF THE CAP.
3. EXCEPT AS CONTROLLED BY ELEVATIONS INDICATED ON THE PROJECT PLANS, THE MINIMUM SLOPE FOR ALL PIPES SHALL BE 2 PERCENT (S=0.02 MINIMUM).
4. BRANCHES SHALL BE EITHER TEES OR WYES AND SHALL BE ROTATED UPWARD FROM THE HORIZONTAL TO AN ANGLE OF 22 1/2 DEGREES TO 45 DEGREES WHEN TEES ARE USED. BENDS ARE NOT REQUIRED BUT MAY BE USED AT THE OPTION OF THE CONTRACTOR WHEN THE BRANCH ROTATION DOES NOT CONFORM TO THE SLOPE OF THE HOUSE CONNECTION SEWER. PULLED JOINTS MAY BE USED FOR ADJUSTMENT.
5. ALL HOUSE CONNECTION SEWERS OR PORTIONS THEREOF CONSTRUCTED ON A SLOPE EXCEEDING 45° SHALL BE MADE ENCASED.

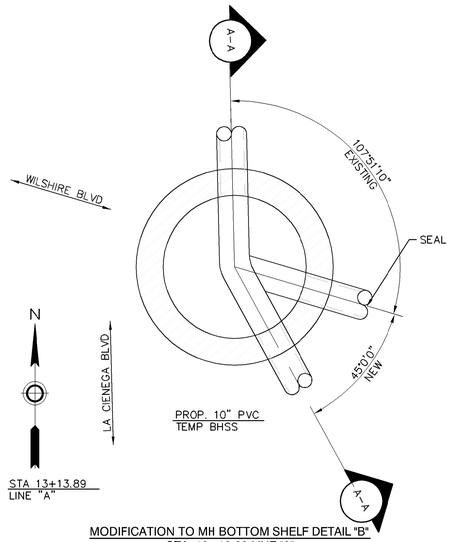

MODIFICATION TO MH BOTTOM SHELF DETAIL "B"
STA. 13+13.89 LINE "A"

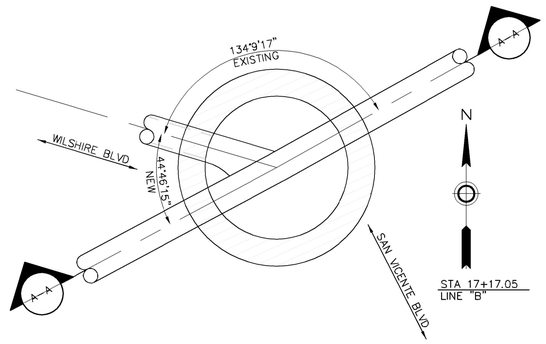

MODIFICATION TO MH BOTTOM SHELF DETAIL "C"
STA. 17+77.05 LINE "B"

HORIZONTAL AND VERTICAL LOCATIONS TO BE VERIFIED IN THE FIELD AND ENGINEER NOTIFIED OF ANY DISCREPANCIES PRIOR TO CONSTRUCTION.

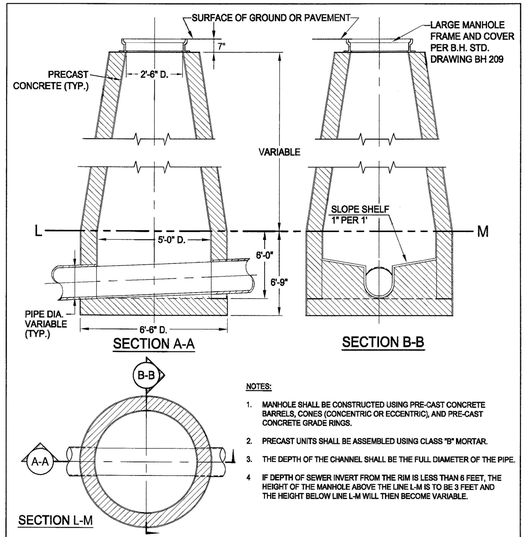

NOTES:
1. MANHOLE SHALL BE CONSTRUCTED USING PRE-CAST CONCRETE BARRELS, CONES (CONCENTRIC OR ECCENTRIC), AND PRE-CAST CONCRETE GRADE RINGS.
2. PRECAST UNITS SHALL BE ASSEMBLED USING CLASS "B" MORTAR.
3. THE DEPTH OF THE CHANNEL SHALL BE THE FULL DIAMETER OF THE PIPE.
4. IF DEPTH OF SEWER INVERT FROM THE RIM IS LESS THAN 6 FEET, THE HEIGHT OF THE MANHOLE ABOVE THE LINE L-M IS TO BE 3 FEET AND THE HEIGHT BELOW LINE L-M WILL THEN BECOME VARIABLE.

LARGE MANHOLE "B"

REVISIONS

MARK	DATE	DESCRIPTION

CITY OF BEVERLY HILLS, CALIFORNIA
DEPARTMENT OF PUBLIC WORKS & TRANSPORTATION
CIVIL ENGINEERING DIVISION

RECOMMENDED _____ CITY ENGINEER DATE 7-30-09
APPROVED _____ PUBLIC WORKS DIRECTOR DATE 7-31-09

STANDARD DRAWING **BH 202** SHEET 1 OF 1

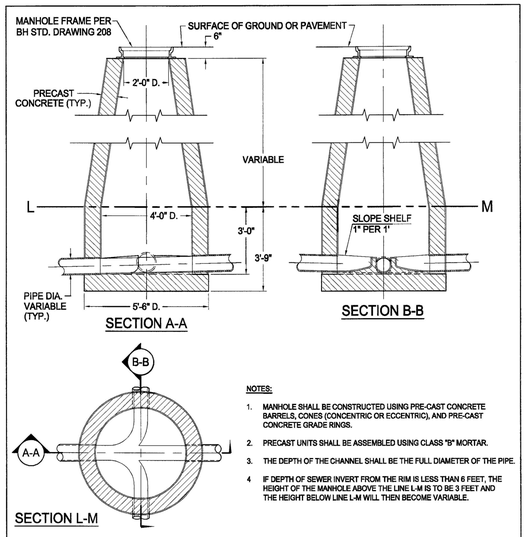

NOTES:
1. MANHOLE SHALL BE CONSTRUCTED USING PRE-CAST CONCRETE BARRELS, CONES (CONCENTRIC OR ECCENTRIC), AND PRE-CAST CONCRETE GRADE RINGS.
2. PRECAST UNITS SHALL BE ASSEMBLED USING CLASS "B" MORTAR.
3. THE DEPTH OF THE CHANNEL SHALL BE THE FULL DIAMETER OF THE PIPE.
4. IF DEPTH OF SEWER INVERT FROM THE RIM IS LESS THAN 6 FEET, THE HEIGHT OF THE MANHOLE ABOVE THE LINE L-M IS TO BE 3 FEET AND THE HEIGHT BELOW LINE L-M WILL THEN BECOME VARIABLE.

JUNCTION CHAMBER "G"

REVISIONS

MARK	DATE	DESCRIPTION

CITY OF BEVERLY HILLS, CALIFORNIA
DEPARTMENT OF PUBLIC WORKS & TRANSPORTATION
CIVIL ENGINEERING DIVISION

RECOMMENDED _____ CITY ENGINEER DATE 7-30-09
APPROVED _____ PUBLIC WORKS DIRECTOR DATE 7-31-09

STANDARD DRAWING **BH 204** SHEET 1 OF 1

C1056 AUR CONTRACT DRAWING NO. UC-107

PROJECT:
BEVERLY HILLS
WESTSIDE SUBWAY EXTENSION ADVANCED UTILITY RELOCATIONS

WILSHIRE / LA CIENEGA STATION
TEMPORARY SEWER RELOCATION
HOUSE CONNECTION DETAIL, TABLE AND JUNCTION DETAIL

SUBMITTED _____ DATE _____
APPROVED _____ DATE _____
CITY ENGINEER

JOB NO. 1335 DRAWING NO. 7443
SHEET 34 OF 172 SHEET

CITY OF BEVERLY HILLS, CALIFORNIA
CIVIL ENGINEERING DEPARTMENT

SCALE: AS SHOWN
F.B. NO. F.B.NO. PAGE -- TO --
DESIGNED G. MUNSON DATE 02/07/14
DRAWN O. RODRIGUEZ DATE 02/07/14
CHECKED Z. MUDAR DATE 02/07/14

DATE	DESCRIPTION	BY	REV
4/3/14	AMENDMENT 3	ZM	1
2/21/14	ISSUED FOR SOLICITATION	ZM	0

Metro
LOS ANGELES COUNTY
METROPOLITAN TRANSPORTATION AUTHORITY
777 SOUTH FIGUEROA ST. 11TH FLOOR
LOS ANGELES, CA 90017

PARSONS BRINCKERHOFF
PREPARED UNDER THE SUPERVISION OF:
NAME: ZAFER MUDAR LIC. # C64154; EXPIRES 12/31/14 DATE

REGISTERED PROFESSIONAL ENGINEER
ZAFER MUDAR
No. C64154
EXPIRES: 12/31/2014
CIVIL
STATE OF CALIFORNIA

Plot Date & Time: 4/1/2014 3:15:00 PM Plotted by: Nadon,Roque
DWG Reference: C:\LAWSBM\WACBM\CADD\12_UTILITIES\01FOR\BH\BHSAWER\PLANS & PROFILES\01DUC107.DWG

HORIZONTAL AND VERTICAL LOCATIONS TO BE VERIFIED IN THE FIELD AND ENGINEER NOTIFIED OF ANY DISCREPANCIES PRIOR TO CONSTRUCTION.

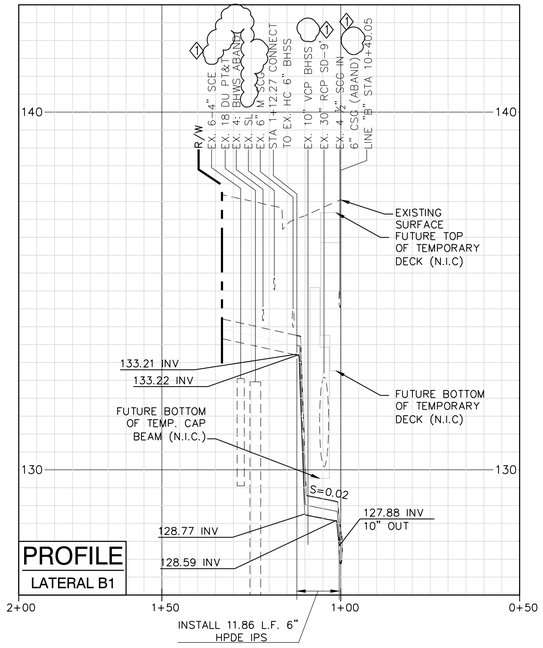

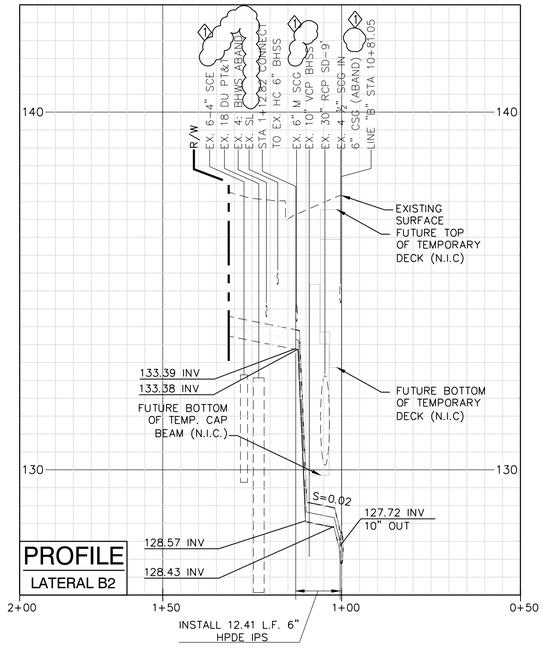

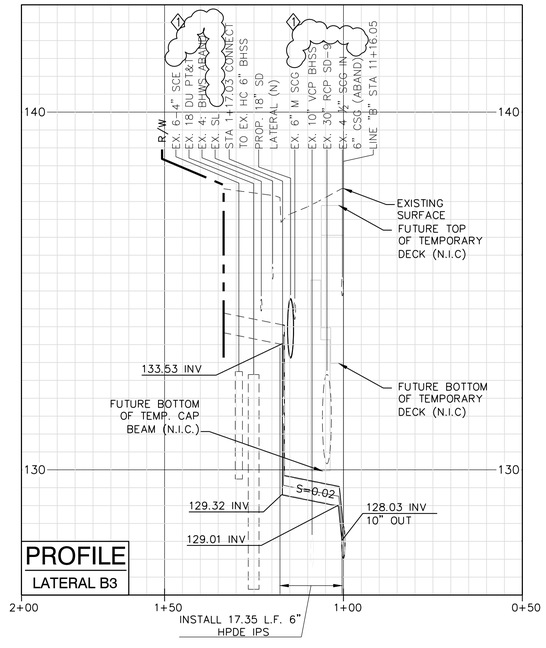

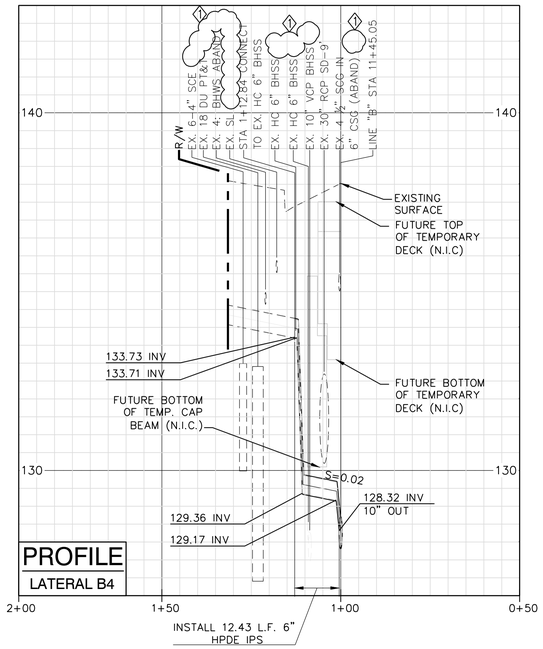

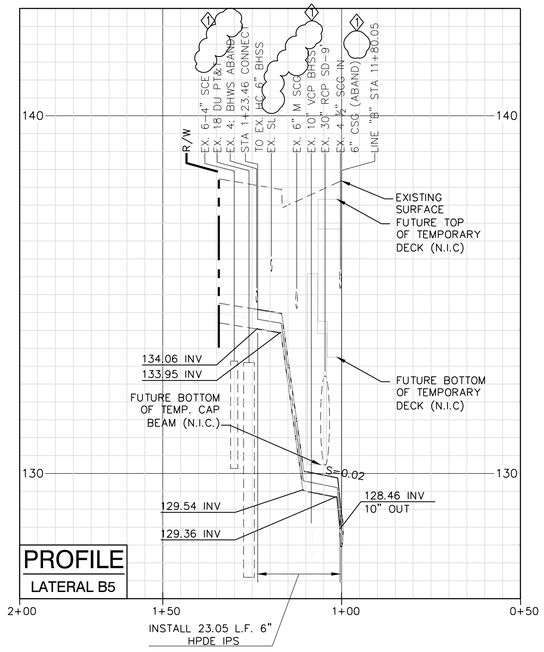

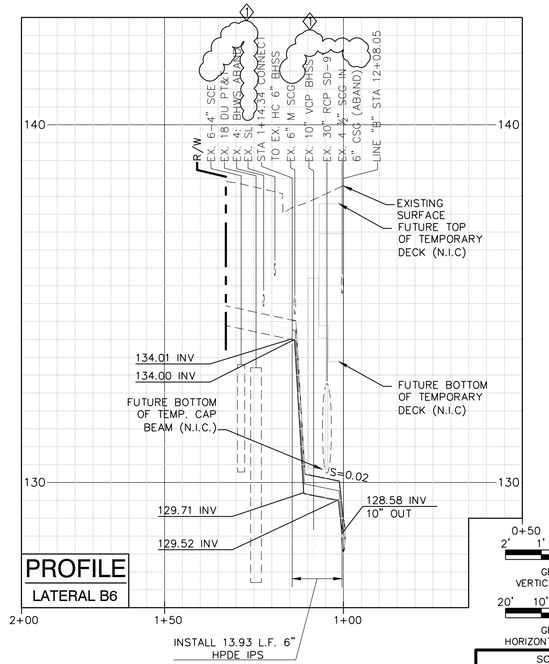

GRAPHIC SCALE
VERTICAL SCALE: 1" = 2'
2' 1' 0' 2'

GRAPHIC SCALE
HORIZONTAL SCALE: 1" = 20'
20' 10' 0' 20'

C1056 AUR CONTRACT DRAWING NO. UC-110

PROJECT:
BEVERLY HILLS
WESTSIDE SUBWAY EXTENSION
ADVANCED UTILITY RELOCATIONS
WILSHIRE / LA CIENEGA STATION
TEMPORARY SEWER RELOCATION
PROFILE
LATERALS B1, B2, B3, B4, B5, & B6

SCALE: AS SHOWN
F.B. NO. F.B.NO.PAGE -- TO --

DESIGNED	G. MUNSON	DATE 02/07/14
DRAWN	O. RODRIGUEZ	DATE 02/07/14
CHECKED	Z. MUDAR	DATE 02/07/14

SUBMITTED _____ DATE _____

APPROVED _____ DATE _____
CITY ENGINEER

JOB NO. 1335
DRAWING NO. 7443
SHEET 37 OF 172 SHEET

DATE	DESCRIPTION	BY	REV
4/3/14	AMENDMENT 3	ZM	1
2/21/14	ISSUED FOR SOLICITATION	ZM	0

CITY OF BEVERLY HILLS, CALIFORNIA
CIVIL ENGINEERING DEPARTMENT

Metro
LOS ANGELES COUNTY
METROPOLITAN TRANSPORTATION AUTHORITY
777 SOUTH FIGUEROA ST. 11TH FLOOR
LOS ANGELES, CA 90017

PARSONS BRINCKERHOFF

PREPARED UNDER THE SUPERVISION OF:

NAME: ZAFER MUDAR LIC. # C64154; EXPIRES 12/31/14 DATE

REGISTERED PROFESSIONAL ENGINEER
ZAFER MUDAR
No. C64154
EXPIRES: 12/31/2014
CIVIL
STATE OF CALIFORNIA

Plotted by: Nadon,Roque
Plot Date & Time: 4/1/2014 2:49:32 PM
Drawing Filename: L:\LAWRSM\ACAD\V12_DIR\UTILITIES\UTILITY\PSHEETS\UC1056UC110.DWG

HORIZONTAL AND VERTICAL LOCATIONS TO BE VERIFIED IN THE FIELD AND ENGINEER NOTIFIED OF ANY DISCREPANCIES PRIOR TO CONSTRUCTION.

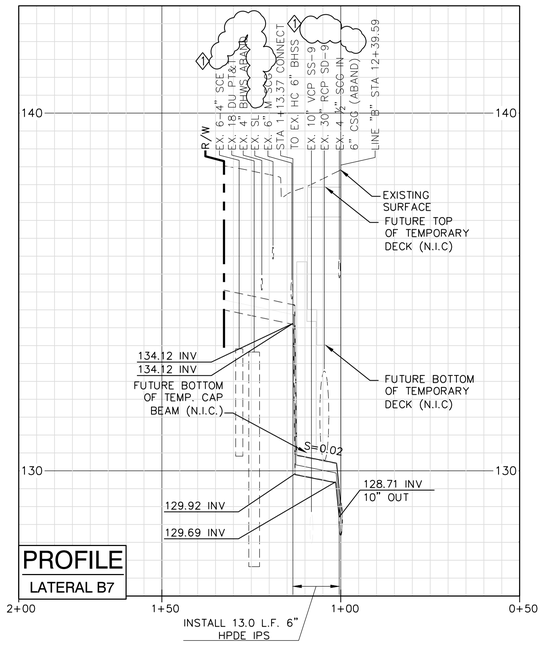

PROFILE
LATERAL B7

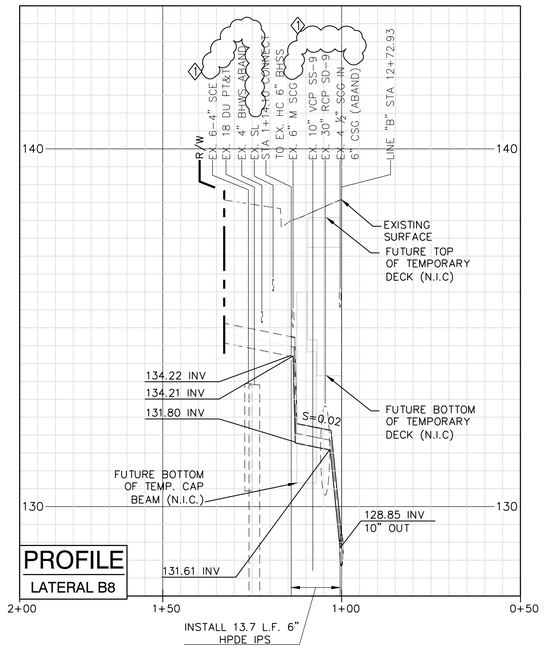

PROFILE
LATERAL B8

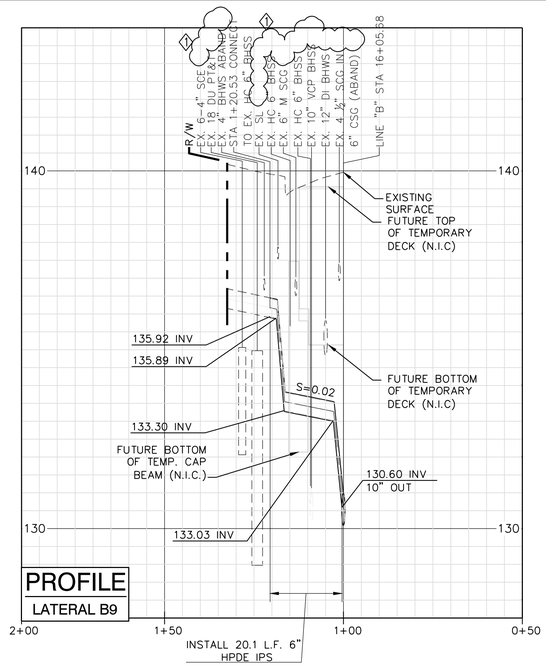

PROFILE
LATERAL B9

2' 1' 0' 2'
GRAPHIC SCALE
VERTICAL SCALE: 1" = 2'

20' 10' 0' 20'
GRAPHIC SCALE
HORIZONTAL SCALE: 1" = 20'

C1056 AUR CONTRACT DRAWING NO. UC-111

PROJECT:
BEVERLY HILLS
WESTSIDE SUBWAY EXTENSION
ADVANCED UTILITY RELOCATIONS
WILSHIRE / LA CIENEGA STATION
TEMPORARY SEWER RELOCATION
PROFILE
(1) LATERALS B7, B8, & B9

SCALE: AS SHOWN
F.B. NO. F.B.NO.PAGE -- TO --
DESIGNED G. MUNSON DATE 02/07/14
DRAWN O. RODRIGUEZ DATE 02/07/14
CHECKED Z. MUDAR DATE 02/07/14

DATE	DESCRIPTION	BY	REV
4/3/14	AMENDMENT 3	ZM	1
2/21/14	ISSUED FOR SOLICITATION	ZM	0

SUBMITTED _____ DATE _____
APPROVED _____ DATE _____
CITY ENGINEER

JOB NO. 1335
DRAWING NO. 7443
SHEET 38 OF 172 SHEET

CITY OF BEVERLY HILLS, CALIFORNIA
CIVIL ENGINEERING DEPARTMENT

Metro
LOS ANGELES COUNTY
METROPOLITAN TRANSPORTATION AUTHORITY

PARSONS BRINCKERHOFF
777 SOUTH FIGUEROA ST. 11TH FLOOR
LOS ANGELES, CA 90017

PREPARED UNDER THE SUPERVISION OF:

NAME: ZAFER MUDAR LIC. # C64154; EXPIRES 12/31/14 DATE

REGISTERED PROFESSIONAL ENGINEER
ZAFER MUDAR
No. C64154
EXPIRES: 12/31/2014
CIVIL
STATE OF CALIFORNIA

Plotted by: Nadon,Roque
Plot Date & Time: 4/1/2014 2:48:40 PM
LWG Filename: L:\LAWSBIM\WA\BEV\CADD\Y2_DTL\TIES\CITY\PDF\BH\SHEETS\PLANS & PROFILES\C1056UC111.DWG

HORIZONTAL AND VERTICAL LOCATIONS TO BE VERIFIED IN THE FIELD AND ENGINEER NOTIFIED OF ANY DISCREPANCIES PRIOR TO CONSTRUCTION.

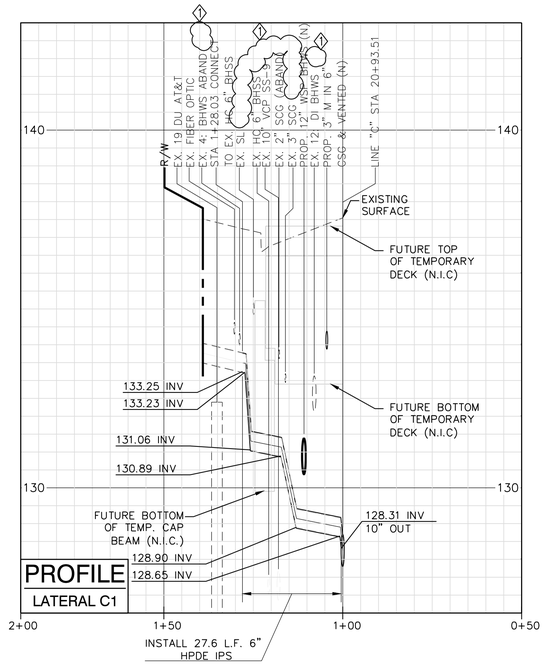

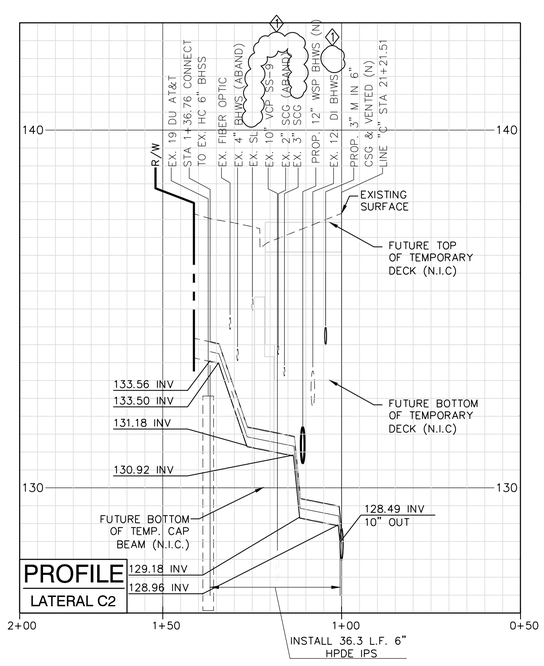

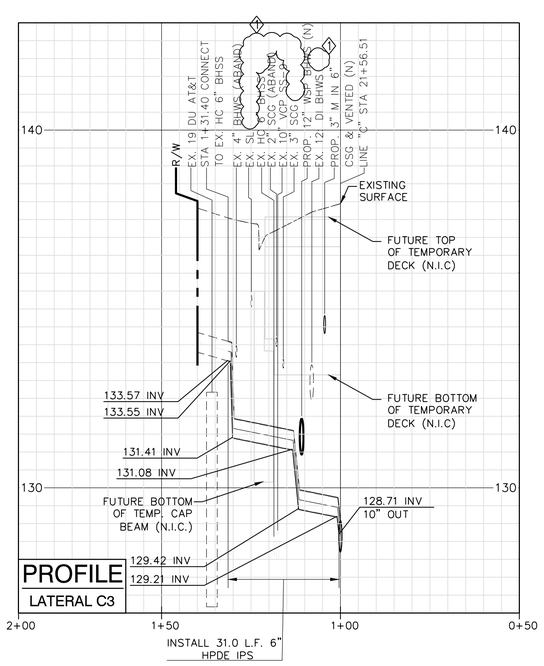

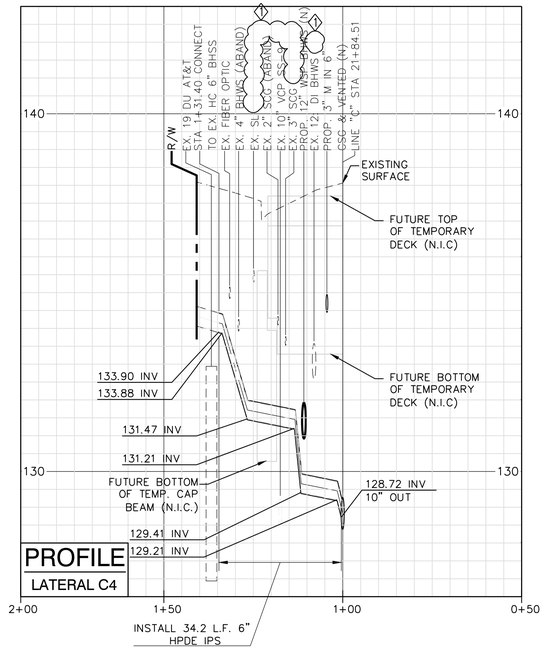

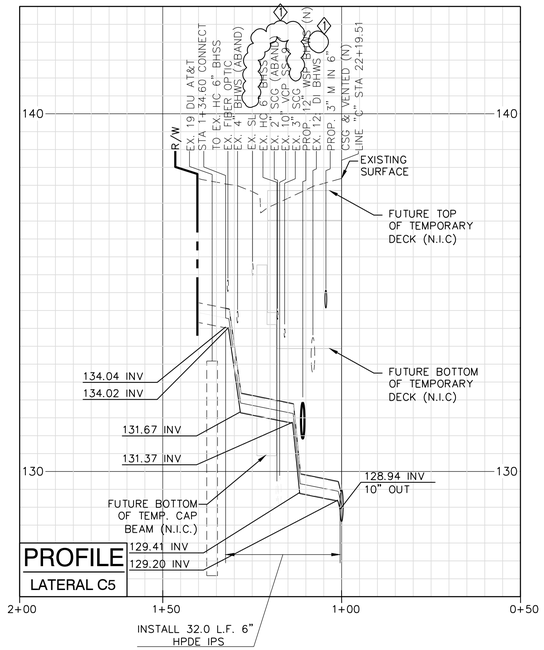

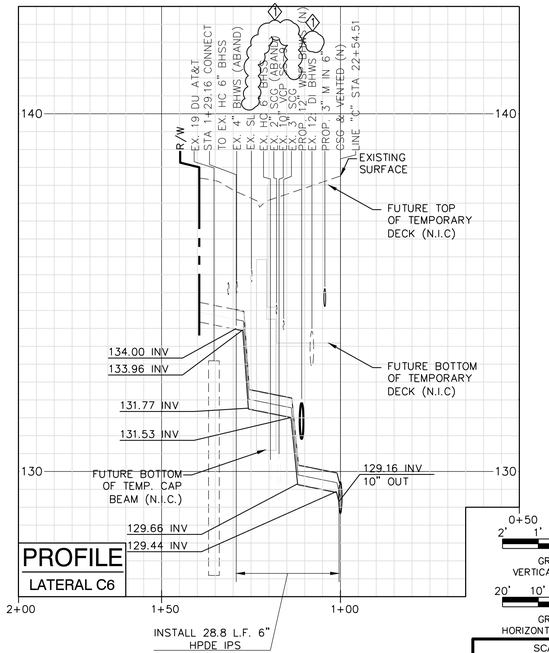

GRAPHIC SCALE
VERTICAL SCALE: 1" = 2'
2' 1' 0' 2'

GRAPHIC SCALE
HORIZONTAL SCALE: 1" = 20'
20' 10' 0' 20'

C1056 AUR CONTRACT DRAWING NO. UC-112

PROJECT:
BEVERLY HILLS
WESTSIDE SUBWAY EXTENSION
ADVANCED UTILITY RELOCATIONS
WILSHIRE / LA CIENEGA STATION
TEMPORARY SEWER RELOCATION
PROFILE
LATERALS C1, C2, C3, C4, C5, & C6

SCALE: AS SHOWN
F.B. NO. F.B.NO.PAGE -- TO --

DESIGNED	C. MUNSON	DATE 02/07/14
DRAWN	O. RODRIGUEZ	DATE 02/07/14
CHECKED	Z. MUDAR	DATE 02/07/14

SUBMITTED _____ DATE _____
CITY ENGINEER
APPROVED _____ DATE _____

JOB NO. 1335
DRAWING NO. 7443
SHEET 39 OF 172 SHEET

DATE	DESCRIPTION	BY	REV
4/3/14	AMENDMENT 3	ZM	1
2/21/14	ISSUED FOR SOLICITATION	ZM	0

CITY OF BEVERLY HILLS, CALIFORNIA
CIVIL ENGINEERING DEPARTMENT

Metro
LOS ANGELES COUNTY
METROPOLITAN TRANSPORTATION AUTHORITY
777 SOUTH FIGUEROA ST. 11TH FLOOR
LOS ANGELES, CA 90017

PARSONS BRINCKERHOFF
PREPARED UNDER THE SUPERVISION OF:
NAME: ZAFER MUDAR LIC. # C64154; EXPIRES 12/31/14 DATE

REGISTERED PROFESSIONAL ENGINEER
ZAFER MUDAR
No. C64154
EXPIRES: 12/31/2014
CIVIL
STATE OF CALIFORNIA

Plotted by: Nadon,Roque Plot Date & Time: 4/7/2014 2:49:47 PM
W:\to Filename: L:\LA\WSBM\CADD\Y2_DTL\UTILITIES\UC1056\PLANS\SEWER\PLANS & PROFILES\UC1056UC112.DWG

HORIZONTAL AND VERTICAL LOCATIONS TO BE VERIFIED IN THE FIELD AND ENGINEER NOTIFIED OF ANY DISCREPANCIES PRIOR TO CONSTRUCTION.

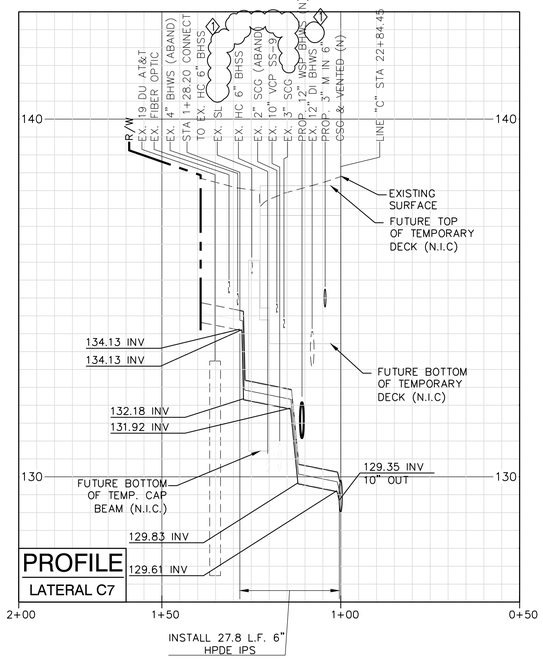

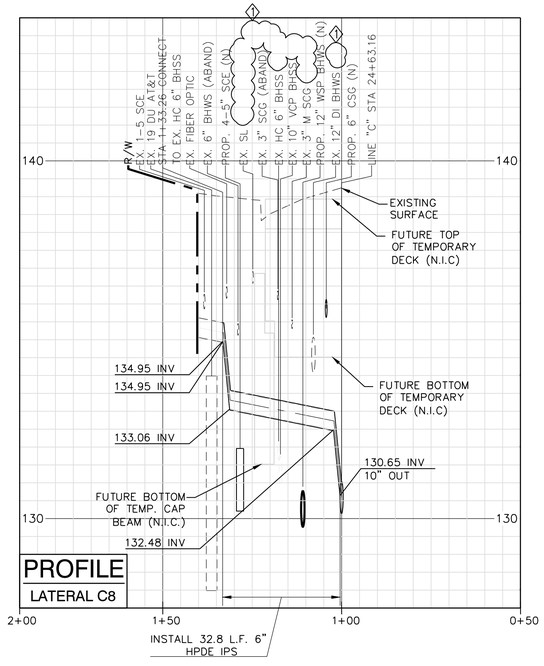

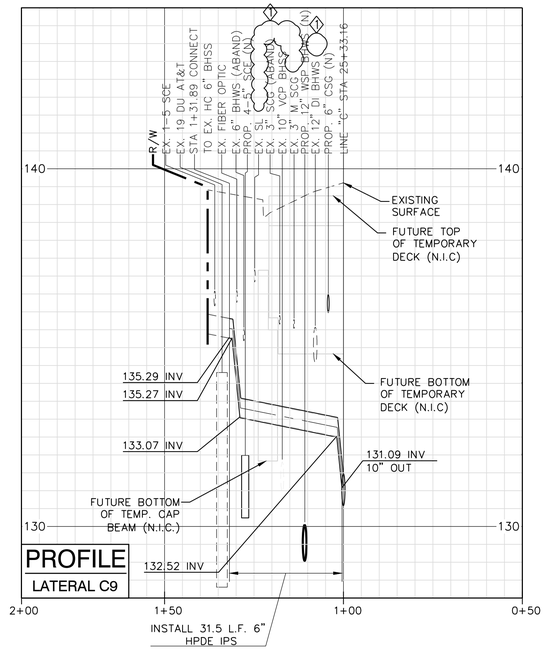

C1056 AUR CONTRACT DRAWING NO. UC-113

2' 1' 0' 2'
GRAPHIC SCALE
VERTICAL SCALE: 1" = 2'

20' 10' 0' 20'
GRAPHIC SCALE
HORIZONTAL SCALE: 1" = 20'

SCALE: AS SHOWN
F.B. NO. F.B.NO.PAGE -- TO --

DESIGNED	G. MUNSON	DATE 02/07/14
DRAWN	O. RODRIGUEZ	DATE 02/07/14
CHECKED	Z. MUDAR	DATE 02/07/14

DATE	DESCRIPTION	BY	REV
4/3/14	AMENDMENT 3	ZM	1
2/21/14	ISSUED FOR SOLICITATION	ZM	0

Metro
LOS ANGELES COUNTY
METROPOLITAN TRANSPORTATION AUTHORITY
777 SOUTH FIGUEROA ST. 11TH FLOOR
LOS ANGELES, CA 90017

PARSONS BRINCKERHOFF
PREPARED UNDER THE SUPERVISION OF:
NAME: ZAFER MUDAR LIC. # C64154; EXPIRES 12/31/14 DATE

REGISTERED PROFESSIONAL ENGINEER
ZAFER MUDAR
No. C64154
EXPIRES: 12/31/2014
CIVIL
STATE OF CALIFORNIA

PROJECT:
BEVERLY HILLS
WESTSIDE SUBWAY EXTENSION
ADVANCED UTILITY RELOCATIONS
WILSHIRE / LA CIENEGA STATION
TEMPORARY SEWER RELOCATION
PROFILE
(1) LATERALS C7, C8 & C9

SUBMITTED _____ DATE _____
APPROVED _____ DATE _____
CITY ENGINEER

JOB NO. 1335
DRAWING NO. 7443
SHEET 40 OF 172 SHEET

CITY OF BEVERLY HILLS, CALIFORNIA
CIVIL ENGINEERING DEPARTMENT

DWG filename: L:\LAW\BHV\WA\BHV\CADD\Y2_DTILITIES\CITY\PDF\BHSEWER\PLANS & PROFILES\UC1056UC113.DWG Plot Date & Time: 4/1/2014 2:49:55 PM Plotted by: Nadon,Roque

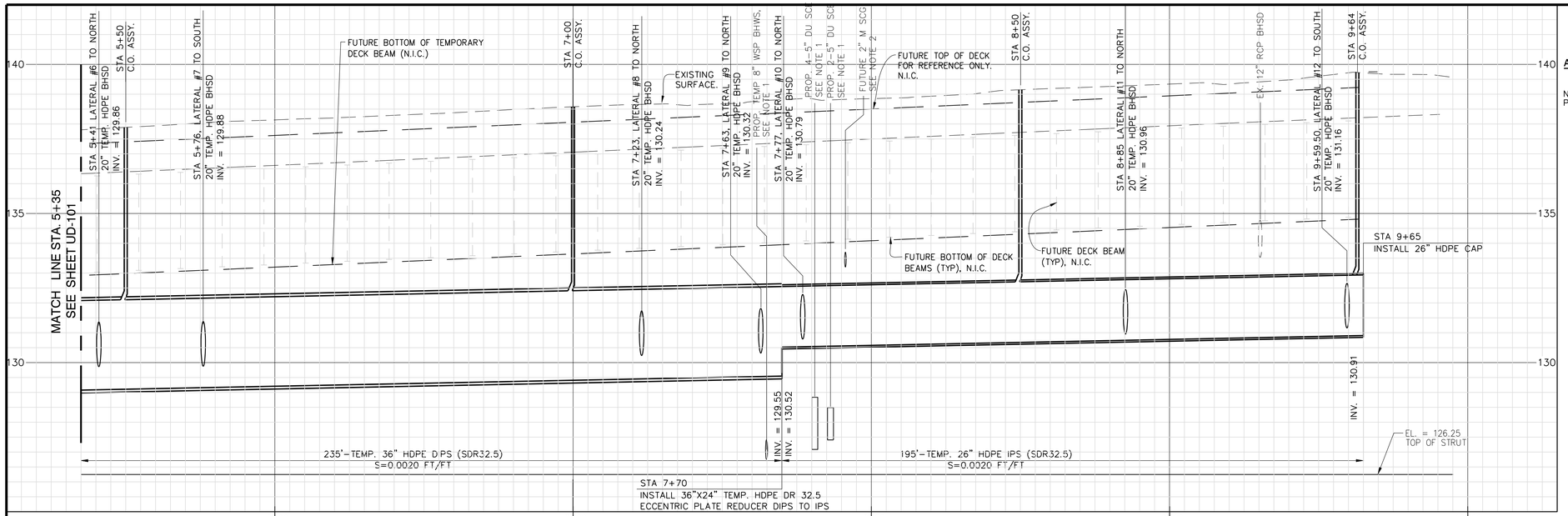

HORIZONTAL AND VERTICAL LOCATIONS TO BE VERIFIED IN THE FIELD AND ENGINEER NOTIFIED OF ANY DISCREPANCIES PRIOR TO CONSTRUCTION.

ABBREVIATIONS:

BH	=CITY OF BEVERLY HILLS
EX	=EXISTING
N.I.C.	=NOT IN CONTRACT
PROP.	=PROPOSED

SEE DRAWINGS UD-103 THRU UD-104 FOR TEMP. DRAIN LATERAL PROFILES.

LINE "B"

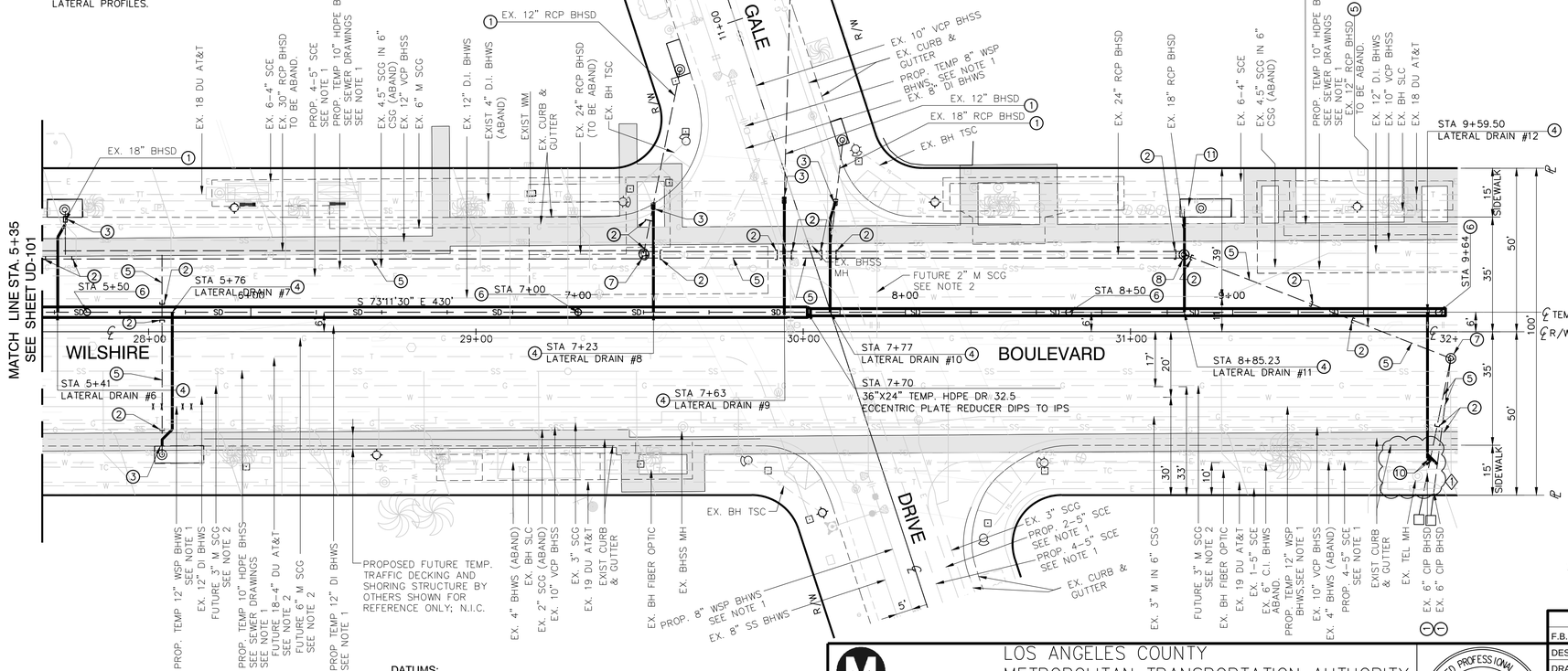

CONSTRUCTION KEY NOTES

1. EXISTING UTILITY LINE TO REMAIN, PROTECT IN PLACE.
2. CAP TO SEAL AND ABANDON EXISTING STORM DRAIN LINE PER GREEN BOOK SPEC SECTION 306-5. CONTRACTOR SHALL FIELD ADJUST LOCATION OF CAP AS REQUIRED TO CONSTRUCT TEMPORARY HDPE STORM LINES.
3. CONSTRUCT CONCRETE COLLAR PER GREEN BOOK STD. PLAN 380-4 WHERE NEW TEMPORARY HDPE PIPE JOINS EXISTING BHSD.
4. CONSTRUCT 20" HDPE IPS SDR(32.5) TEMPORARY STORM DRAIN LATERAL PER PROFILES ON SHEET 45 AND 46. LATERAL SHALL INCLUDE FACTORY FABRICATED 20" HDPE ASSEMBLY FOR FUSING TO 36" OR 24" TEMPORARY HDPE STORM MAIN.
5. ABANDON EXISTING BHSD IN PLACE AS IS.
6. CONSTRUCT TEMPORARY TRAFIC RATED 8" HDPE CLEAN-OUT ASSY. TO STORM DRAIN. ALL CONNECTIONS TO NEW TEMPORARY 36" I.D. AND 24" I.D. HDPE PIPES SHALL BE THERMALLY FUSED. INSTALL ADAPTORS TO ACCOMMODATE CAST IRON FRAME AND LID PER CITY OF BEVERLY HILLS STANDARDS.
7. ABANDON EXISTING BHSD MH IN PLACE AS IS.
8. REMOVE EXISTING STORM DRAIN MANHOLE SECTIONS TO A DEPTH OF 8 FT FROM EXISTING ROADWAY SURFACE. SLURRY FILL REMAINING PORTION TO BE ABANDON IN PLACE WITH CEMENT SAND SLURRY PER GREEN BOOK STD. SPECIFICATION 201-6.
10. CONSTRUCT 8" HDPE IPS SDR(32.5) ROOF DRAIN CONNECTOR PIPE.
11. MODIFY AND CONSTRUCT CATCH BASIN BOTTOM INLET AND OUTLET PER GREEN BOOK STD NO 300-3 AND DETAIL C ON SHEET 47.

NOTES:

1. TO BE CONSTRUCTED PER C1056 ADVANCED UTILITY RELOCATIONS CONTRACT PACKAGE.
2. C1056 CONTRACTOR TO VERIFY STATUS OF UTILITY RELOCATIONS WITH THE OWNER.
3. FUTURE APPENDAGES AND STATION ENTRANCES ARE SHOWN FOR REFERENCE ONLY AND N.I.C.

DATUMS:

THE BASIS OF HORIZONTAL CONTROL FOR THIS PROJECT IS THE CALIFORNIA COORDINATE SYSTEM NAD83 ZONE 5 (2007.0 EPOCH) DETERMINED LOCALLY BY THE FOLLOWING NGS POINTS: EW9587, EW9595 AND AA9327.

ELEVATIONS ARE BASED ON THE NAVD 1988 – SPECIFICALLY CITY OF LOS ANGELES BENCHMARKS 12-16091, 13-13450 AND 13-13352 (2000 ADJ)

GRAPHIC SCALE VERTICAL SCALE: 1" = 2'
2' 1' 0' 2'

GRAPHIC SCALE HORIZONTAL SCALE: 1" = 20'
20' 10' 0' 20'

N

C1056 AUR CONTRACT DRAWING NO. UD-102

Metro

LOS ANGELES COUNTY METROPOLITAN TRANSPORTATION AUTHORITY

777 SOUTH FIGUEROA ST. 11TH FLOOR
LOS ANGELES, CA 90017

PREPARED UNDER THE SUPERVISION OF:

NAME: ZAFER MUDAR LIC. # C64154; EXPIRES 12/31/14 DATE

PARSONS BRINCKERHOFF

REGISTERED PROFESSIONAL ENGINEER
ZAFER MUDAR
No. C64154
EXPIRES: 12/31/2014
CIVIL
STATE OF CALIFORNIA

SCALE: AS SHOWN			
F.B. NO. F.B.NO.PAGE -- TO --			
DESIGNED G. MUNSON	DATE 02/07/14		
DRAWN S. SIRKATOVA	DATE 02/07/14		
CHECKED Z. MUDAR	DATE 02/07/14		
4/3/14	AMENDMENT 3	ZM	1
2/21/14	ISSUED FOR SOLICITATION	ZM	0
DATE	DESCRIPTION	BY	REV

PROJECT: BEVERLY HILLS
WESTSIDE SUBWAY EXTENSION
ADVANCED UTILITY RELOCATIONS
WILSHIRE / LA CIENEGA STATION
TEMPORARY STORM DRAIN RELOCATION
PLAN AND PROFILE
STA 5+35.00 TO STA 9+65

SUBMITTED _____ DATE _____
CITY ENGINEER
APPROVED _____ DATE _____

JOB NO. 1335 DRAWING NO. 7443
SHEET 44 OF 172 SHEET

CITY OF BEVERLY HILLS, CALIFORNIA
CIVIL ENGINEERING DEPARTMENT

DWG filename: L:\LA\PSBW\WA-CBM\CADD\Y2_UTILITIES\OTHER\BHS\DRAIN\PLANS & PROFILES\C1056UD102.DWG Plotted by: NocomAcque Plot Date & time: 4/7/2014 2:50:18 PM

HORIZONTAL AND VERTICAL LOCATIONS TO BE VERIFIED IN THE FIELD AND ENGINEER NOTIFIED OF ANY DISCREPANCIES PRIOR TO CONSTRUCTION.

ABBREVIATIONS:

BH =CITY OF BEVERLY HILLS
EX =EXISTING
N.I.C. =NOT IN CONTRACT
PROP. =PROPOSED

NOTES:

1. TO BE CONSTRUCTED PER C1056 ADVANCED UTILITY RELOCATIONS CONTRACT PACKAGE.
2. C1056 CONTRACTOR TO VERIFY STATUS OF UTILITY RELOCATIONS WITH THE OWNER.

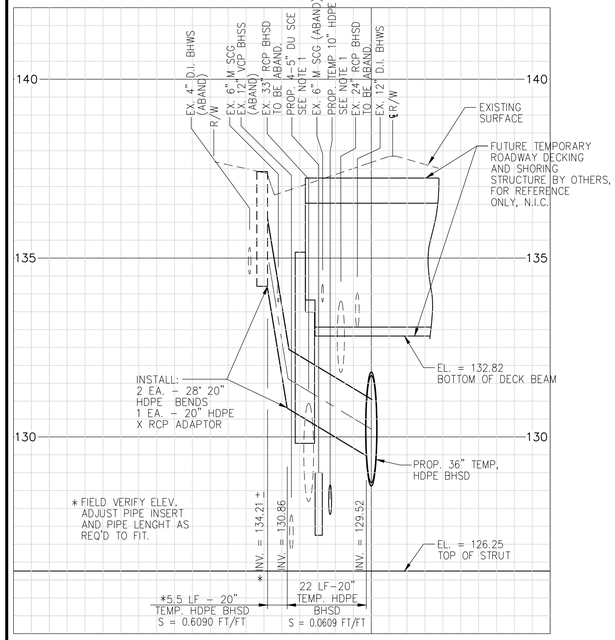

LATERAL #2

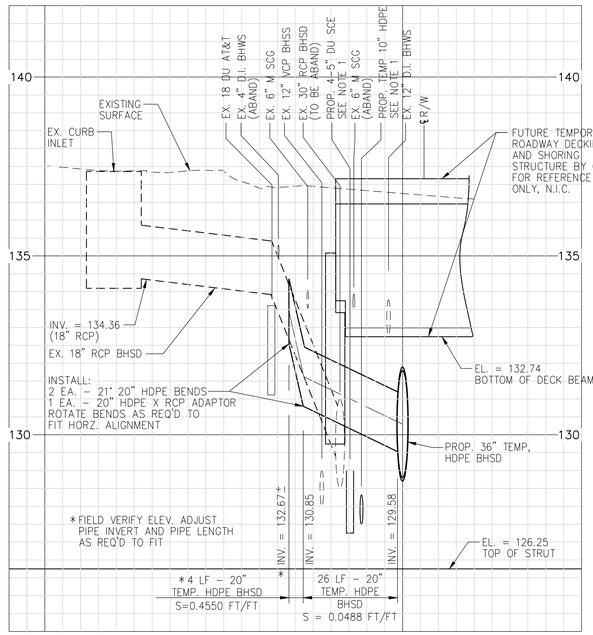

LATERAL #3

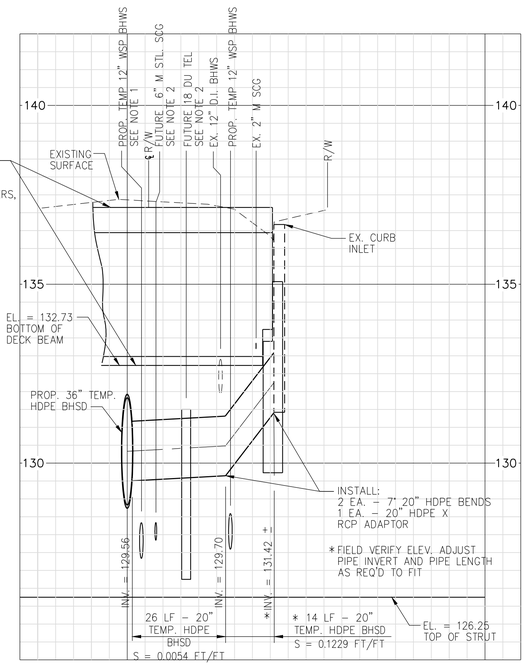

LATERAL #4

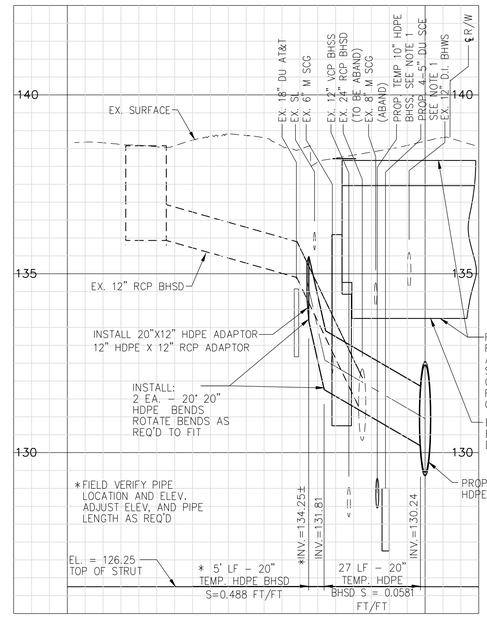

LATERAL #8

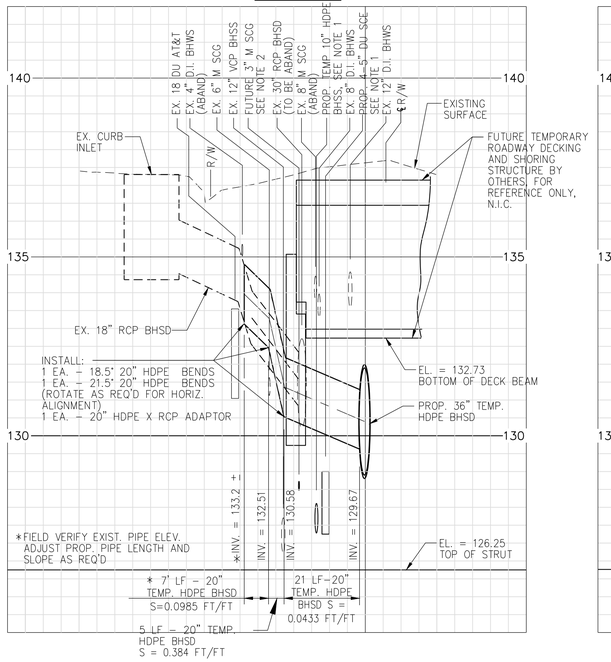

LATERAL #5

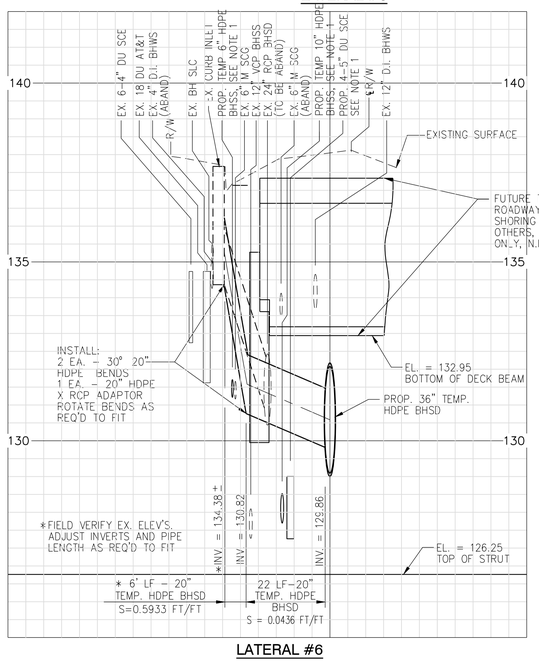

LATERAL #6

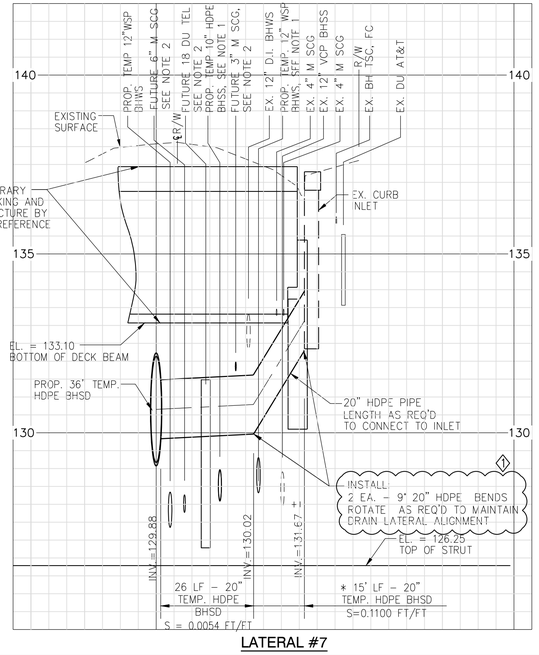

LATERAL #7

GRAPHIC SCALE
VERTICAL SCALE: 1" = 2'
2' 1' 0' 2'

GRAPHIC SCALE
HORIZONTAL SCALE: 1" = 20'
20' 10' 0' 20'

C1056 AUR CONTRACT DRAWING NO. UD-103

PROJECT:
BEVERLY HILLS
WESTSIDE SUBWAY EXTENSION ADVANCED UTILITY RELOCATIONS
WILSHIRE / LA CIENEGA STATION
TEMPORARY STORM DRAIN RELOCATION
PLAN AND PROFILE
LATERAL # 2, 3, 4, 5, 6, 7 & 8

Metro
LOS ANGELES COUNTY METROPOLITAN TRANSPORTATION AUTHORITY
777 SOUTH FIGUEROA ST. 11TH FLOOR
LOS ANGELES, CA 90017

PARSONS BRINCKERHOFF

PREPARED UNDER THE SUPERVISION OF:
NAME: ZAFER MUDAR LIC. # C64154; EXPIRES 12/31/14 DATE

REGISTERED PROFESSIONAL ENGINEER ZAFER MUDAR No. C64154 EXPIRES: 12/31/2014 Civil STATE OF CALIFORNIA

SCALE: AS SHOWN
F.B. NO. F.B.NO. PAGE -- TO --

DESIGNED	G. MUNSON	DATE	02/07/14
DRAWN	S. SIRKATOVA	DATE	02/07/14
CHECKED	Z. MUDAR	DATE	02/07/14

DATE	DESCRIPTION	BY	REV
4/3/14	AMENDMENT 3		1
2/21/14	ISSUED FOR SOLICITATION	ZM	0

SUBMITTED DATE
APPROVED DATE
CITY ENGINEER

JOB NO. 1335
DRAWING NO. 7443
SHEET 45 OF 172 SHEET

CITY OF BEVERLY HILLS, CALIFORNIA
CIVIL ENGINEERING DEPARTMENT

Plotted by: Nocion.Roque Plot Date & Time: 4/1/2014 2:50:24 PM
DWG Filename: L:\LAWSWM\WAGEM\CADD\C2_UTILITIES\C1056UD103.DWG

HORIZONTAL AND VERTICAL LOCATIONS TO BE VERIFIED IN THE FIELD AND ENGINEER NOTIFIED OF ANY DISCREPANCIES PRIOR TO CONSTRUCTION.

ABBREVIATIONS:

BH	=CITY OF BEVERLY HILLS
EX	=EXISTING
N.I.C.	=NOT IN CONTRACT
PROP.	=PROPOSED

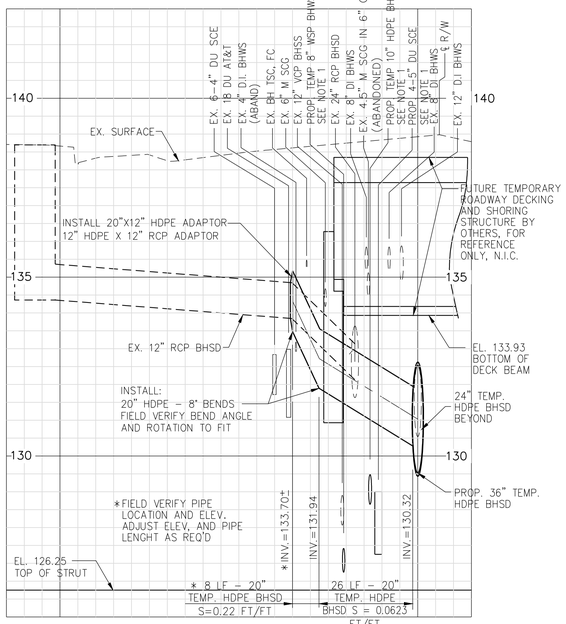

LATERAL #9

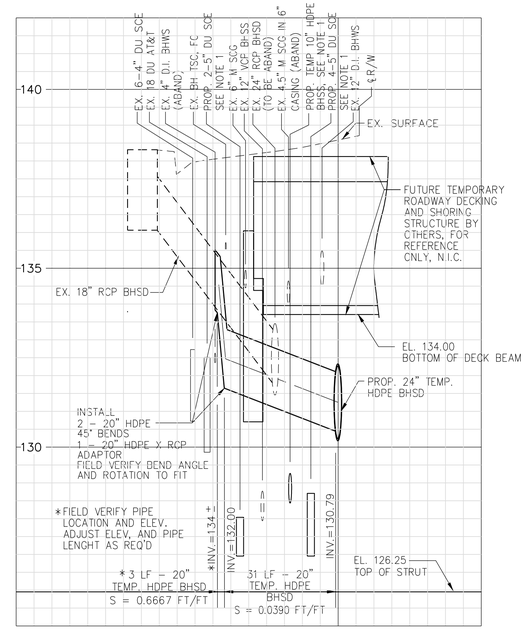

LATERAL #10

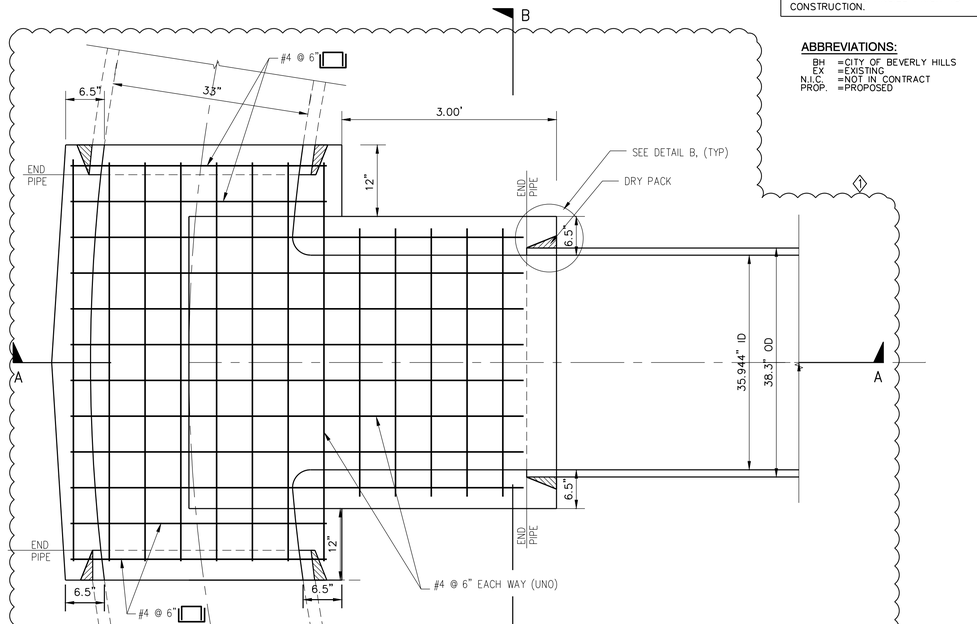

PLAN

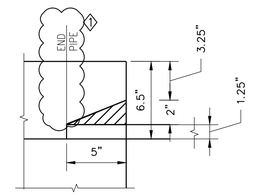

DETAIL B
NOT TO SCALE

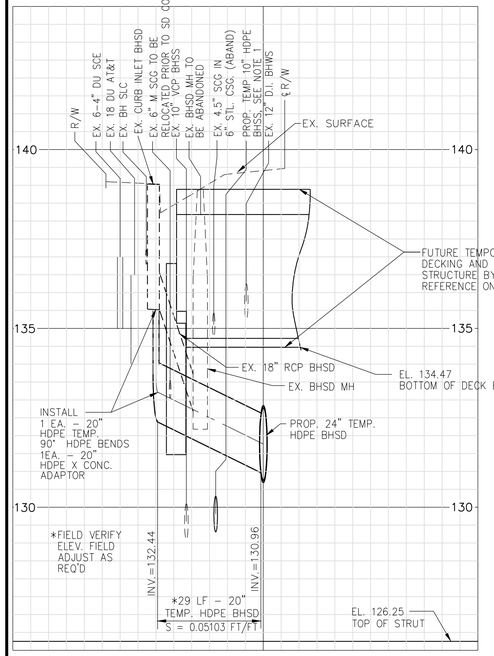

LATERAL #11

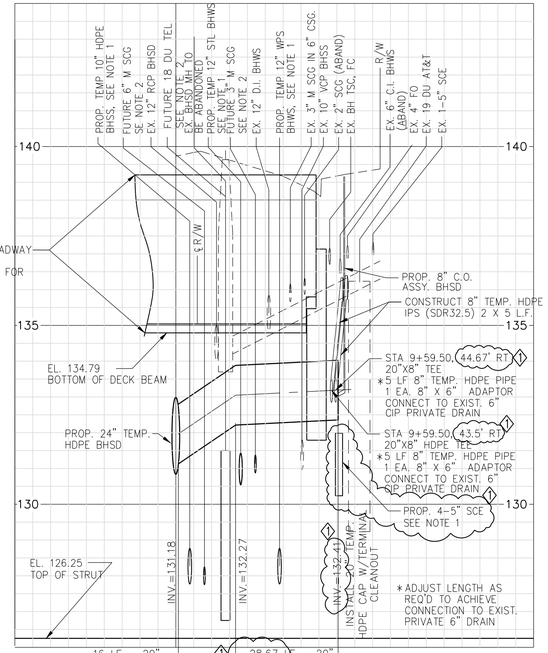

LATERAL #12

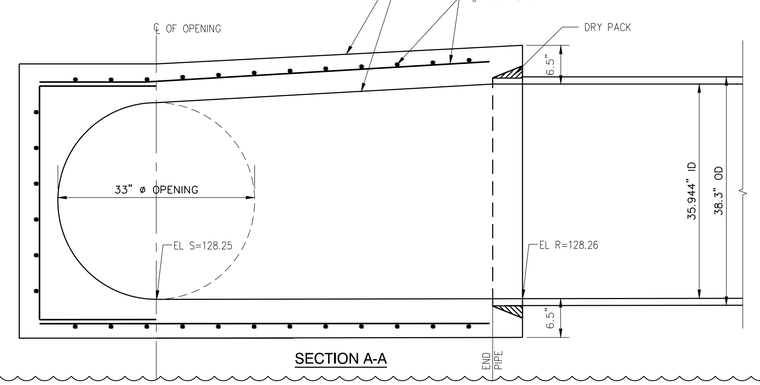

SECTION A-A

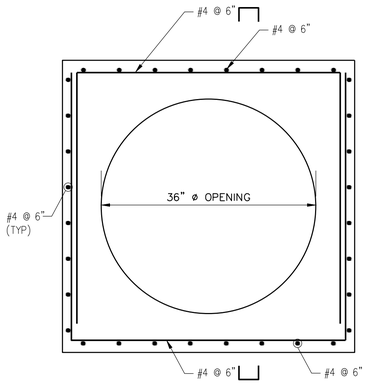

SECTION B-B

DETAIL A
SCALE: 1"=1'-0"
NOTE: CJ NOT SHOWN

GRAPHIC SCALE
VERTICAL SCALE: 1" = 2'
2' 1' 0' 2'

GRAPHIC SCALE
HORIZONTAL SCALE: 1" = 20'
20' 10' 0' 20'

NOTES:

1. TO BE CONSTRUCTED PER C1056 ADVANCED UTILITY RELOCATIONS CONTRACT PACKAGE.
2. C1056 CONTRACTOR TO VERIFY STATUS OF UTILITY RELOCATIONS WITH THE OWNER.

C1056 AUR CONTRACT DRAWING NO. UD-104

PROJECT:
BEVERLY HILLS
WESTSIDE SUBWAY EXTENSION
ADVANCED UTILITY RELOCATIONS
WILSHIRE / LA CIENEGA STATION
TEMPORARY STORM DRAIN RELOCATION
PLAN AND PROFILE
LATERAL # 9, 10, 11, & 12

SCALE: AS SHOWN
F.B. NO. F.B.NO. PAGE -- TO --

DESIGNED	G. MUNSON	DATE	02/07/14
DRAWN	S. SIRKATOVA	DATE	02/07/14
CHECKED	Z. MUDAR	DATE	02/07/14

DATE	DESCRIPTION	BY	REV
4/3/14	AMENDMENT 3	ZM	1
2/21/14	ISSUED FOR SOLICITATION	ZM	0

SUBMITTED _____ DATE _____
APPROVED _____ DATE _____
CITY ENGINEER

JOB NO. 1335
DRAWING NO. 7443
SHEET 46 OF 172 SHEET

CITY OF BEVERLY HILLS, CALIFORNIA
CIVIL ENGINEERING DEPARTMENT

Metro
LOS ANGELES COUNTY
METROPOLITAN TRANSPORTATION AUTHORITY
777 SOUTH FIGUEROA ST. 11TH FLOOR
LOS ANGELES, CA 90017

PARSONS BRINCKERHOFF
PREPARED UNDER THE SUPERVISION OF:
NAME: ZAFER MUDAR LIC. # C64154; EXPIRES 12/31/14 DATE

REGISTERED PROFESSIONAL ENGINEER
ZAFER MUDAR
No. C64154
EXPIRES: 12/31/2014
CIVIL
STATE OF CALIFORNIA

Plot Date & time: 4/1/2014 2:50:34 PM
Plotted by: Nicolin Roque
DWG filename: L:\LA\WSW\WAE\MCAD\V12_OUTLINES\VOTD\BHS\BRAN\PLANS & PROFILES\C1056UD104.DWG

CONSTRUCTION NOTES:

1. INSTALL 8" OR 12" DUCTILE IRON PIPE CLASS 52. SEE NOTE 1
2. INSTALL 8" OR 12" DUCTILE IRON PIPE 45° ANGLE FITTINGS (MJ X MJ) CLASS 52, WITH RESTRAINED JOINTS. INSTALL THRUST BLOCK.
3. INSTALL 8"X8"X6" DUCTILE IRON PIPE TEE (MJ X FLG) FITTING CLASS 52, WITH RESTRAINED JOINTS PER CITY STANDARD BH 705 FOR FIRE HYDRANTS.
4. INSTALL 8" OR 12" PRE ASS'D INSULATING FLANGE TYPE I-E.
5. CAP EXISTING LINE WITH CONCRETE MORTAR PER CITY STANDARD BH 708 AND ABANDON IN PLACE.
6. INSTALL 8" BUTTERFLY VALVE (FLG X FLG), CLASS 150. INSTALL VALVE BOX ASSEMBLY PER CITY STANDARD PLAN BH 707.
7. INSTALL 12" BUTTERFLY VALVE (FLG X FLG), CLASS 150. INSTALL VALVE BOX ASSEMBLY PER CITY STANDARD PLAN BH 707.
8. INSTALL 12-3/4" O.D. X ¼" EN. UC., C.L. & C., S.J. WELDED STEEL PIPE. SEE NOTE 1
9. INSTALL 12" X 12" X 8" FLANGED STEEL TEE, WITH RESTRAINED JOINTS.
10. INSTALLATION OF FIRE HYDRANT PER CITY STANDARD BH 703 & BH 705
11. REMOVE EXISTING F.H. ASSEMBLY, ON F.H. LATERAL, REMOVE F.H GATE VALVE, REMOVE AND DISPOSE OF EXISTING VALVE CAN AND COVER, CAP & PLUG EXISTING TEE.
12. INSTALL 8" OR 12" X 45° WELDED STEEL ELBOW AND CONCRETE THRUST BLOCK.
13. INSTALL 8" X 8" X 6" OR 12" X 12" X 12" FLANGED STEEL TEE, WITH RESTRAINED JOINTS.
14. INSTALL 8-5/8" O.D. X ¼" EN. UC., C.L. & C., S.J. WELDED STEEL PIPE. SEE NOTE 1.
15. REMOVE INTERFERING PORTION OF EXISTING 8" OR 12" WATER MAIN. INSTALL 8" OR 12" DUCTILE IRON SPOOL (MJ X MJ), CLASS 52 WITH RESTRAINED JOINTS AND CONNECT TO EXISTING 8" OR 12" DUCTILE IRON PIPE. SEE SHEETS 52 THRU 55, CASE AS APPLICABLE. EXACT POINT OF CONNECTION TO BE FIELD VERIFIED BY THE CONTRACTOR.
16. INSTALL 6" DUCTILE IRON SPOOL (MJ X MJ), CLASS 52 WITH RESTRAINED JOINTS, CUT AND CONNECT TO EXISTING 6" FIRE HYDRANT LATERAL.
17. REMOVE AND DISPOSE OF EXISTING VALVE CAN COVER.
18. PROTECT IN PLACE EXISTING FIRE HYDRANT, VALVE, ETC.
19. INSTALL DIP FLANGED TEE (12X12X8, 12X12X6 OR 12X12X4) WITH RESTRAINED JOINTS, AND INSTALL BUTTERFLY VALVE (MJ X FLG) PER CITY STD. BH 707 SIZE TO MATCH EXISTING FIRE SERVICE LATERAL.
20. EXISTING SERVICES SHALL BE REALIGNED AND RECONNECTED TO THEIR RESPECTIVE METER BOXES. MAINTAIN A MINIMUM 18" SEPARATION BETWEEN SERVICES.
21. EXISTING WATER METER SERVICE TO BE ABANDONED. THE CONTRACTOR SHALL REMOVE AND SALVAGE TO THE CITY THE EXISTING WATER METER BOX AND LID, AND FILL THE EXISTING HOLE WITH FULL DEPTH AC PAVEMENT.
22. INSTALL 1" WATER SERVICE. BROKEN OR DAMAGED METER BOXES SHALL BE REPLACED PER CITY STANDARD BH 714.
23. INSTALL 2" WATER SERVICE. BROKEN OR DAMAGED METER BOXES SHALL BE REPLACED PER CITY STANDARD BH 714.
24. INSTALL 6" BUTTERFLY VALVE (MJ X FLG), CLASS 150. INSTALL VALVE BOX ASSEMBLY PER CITY STANDARD PLAN BH 707.
25. INSTALL 12" X 8" REDUCER
26. FIELD VERIFY AND EXPOSE 6-5" DU SCE DUCT IN 20" CASING. DETERMINE DEVIATIONS AND FORWARD TO METRO'S AUTHORIZED REPRESENTATIVE PRIOR TO CONSTRUCTING TEMPS. WATER MAINS.
27. INSTALL 6", 8" OR 12" COMPRESSION COUPLING.
28. INSTALL 8" X 18.1° WELDED STEEL ELBOW
29. INSTALL 8" X 60° WELDED STEEL ELBOW
30. INSTALL 8" X 26.9° WELDED STEEL ELBOW
31. INSTALL 8" X 18.2° WELDED STEEL ELBOW
32. APPLY CATHODIC PROTECTION TO STEEL PIPE OUTSIDE OF EXCAVATION ZONE ONLY. SEE SHEET 65 FOR CATHODIC PROTECTION NOTES AND DETAILS

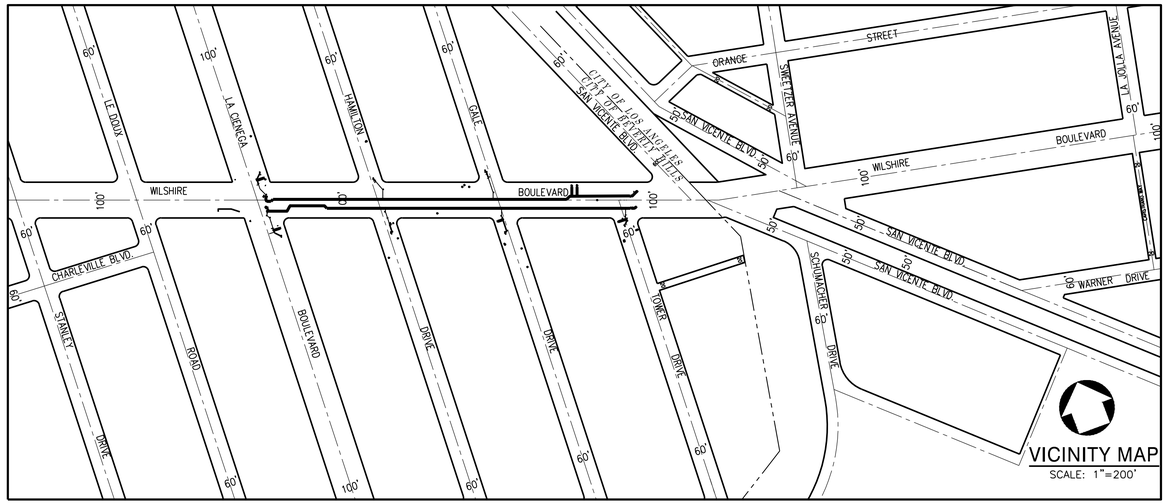

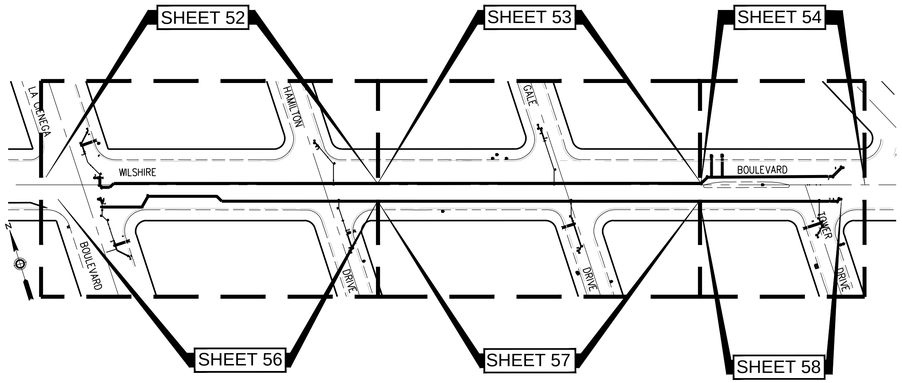

LA CIENEGA STATION

KEY MAP
SCALE: 1"=100'

EXISTING WATER VALVES PER WSM 135-17	
LABEL	NUMBER
B.V.1	18040
B.V.2	18067
B.V.3	18068
B.V.4	18069
B.V.5	18070
B.V.6	18071
B.V.7	18072
B.V.8	18075
B.V.9	18076
B.V.10	18077
B.V.11	18079
B.V.12	18080

DATUMS:

THE BASIS OF HORIZONTAL CONTROL FOR THIS PROJECT IS THE CALIFORNIA COORDINATE SYSTEM NAD83 ZONE 5 (2007.0 EPOCH) DETERMINED LOCALLY BY THE FOLLOWING NGS POINTS: EW9587, EW9595 AND AA9327

ELEVATIONS ARE BASED ON THE NAVD 1988 – SPECIFICALLY CITY OF LOS ANGELES BENCHMARKS 12-16091, 13-13450 AND 13-13352 (2000 ADJ)

C1056 AUR CONTRACT DRAWING NO. UW-010

DIGALERT
DIAL TOLL FREE
1-800-422-4133
AT LEAST TWO DAYS BEFORE YOU DIG
UNDERGROUND SERVICE ALERT OF SOUTHERN CALIFORNIA

Metro
LOS ANGELES COUNTY
METROPOLITAN TRANSPORTATION AUTHORITY
777 SOUTH FIGUEROA ST. 11TH FLOOR
LOS ANGELES, CA 90017
PREPARED UNDER THE SUPERVISION OF:
NAME: ZAFER MUDAR LIC. # C64154; EXPIRES 12/31/14 DATE

PARSONS BRINCKERHOFF

REGISTERED PROFESSIONAL ENGINEER
ZAFER MUDAR
No. C64154
EXPIRES: 12/31/2014
CIVIL
STATE OF CALIFORNIA

SCALE: AS SHOWN			
F.B. NO. F.B.NO. PAGE -- TO --			
DESIGNED C. MALDONADO	DATE 02/07/14		
DRAWN T. CABRERA	DATE 02/07/14		
CHECKED Z. MUDAR	DATE 02/07/14		
4/3/14	AMENDMENT 3	ZM	1
2/21/14	ISSUED FOR SOLICITATION	ZM	0
DATE	DESCRIPTION	BY	REV

PROJECT:
BEVERLY HILLS
WESTSIDE SUBWAY EXTENSION
ADVANCED UTILITY RELOCATIONS
WILSHIRE / LA CIENEGA STATION
TEMPORARY WATER RELOCATION
TITLE SHEET, GENERAL AND CONSTRUCTION NOTES

SUBMITTED _____ DATE _____
APPROVED _____ DATE _____
CITY ENGINEER

JOB NO. 1335
DRAWING NO. 7443
SHEET 51 OF 172 SHEET

CITY OF BEVERLY HILLS, CALIFORNIA
CIVIL ENGINEERING DEPARTMENT

Plot Date & Time: 4/7/2014 2:51:02 PM Plotted by: Nadia Roque
W:\Wo Filename: L:\AWSBM\WACBM\CADD\12_UTILITIES\UTIL\FBH\WATER PLANS & PROFILES\C1056UW010.DWG

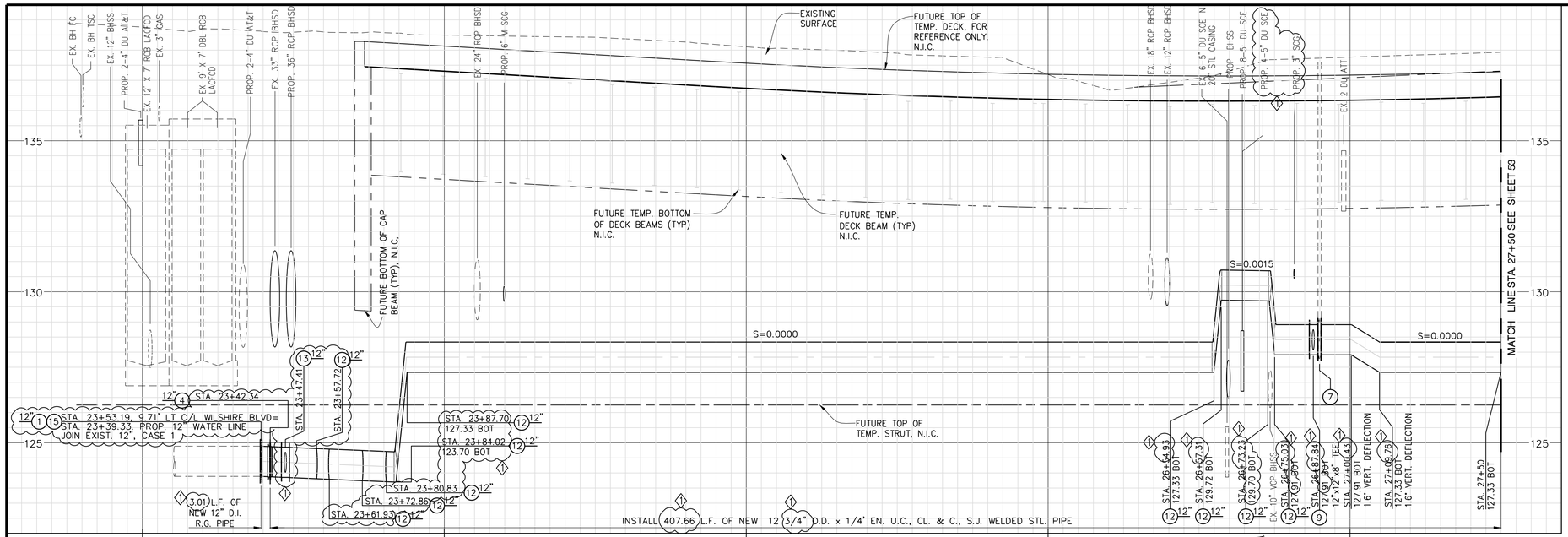

WILSHIRE BOULEVARD-NORTH

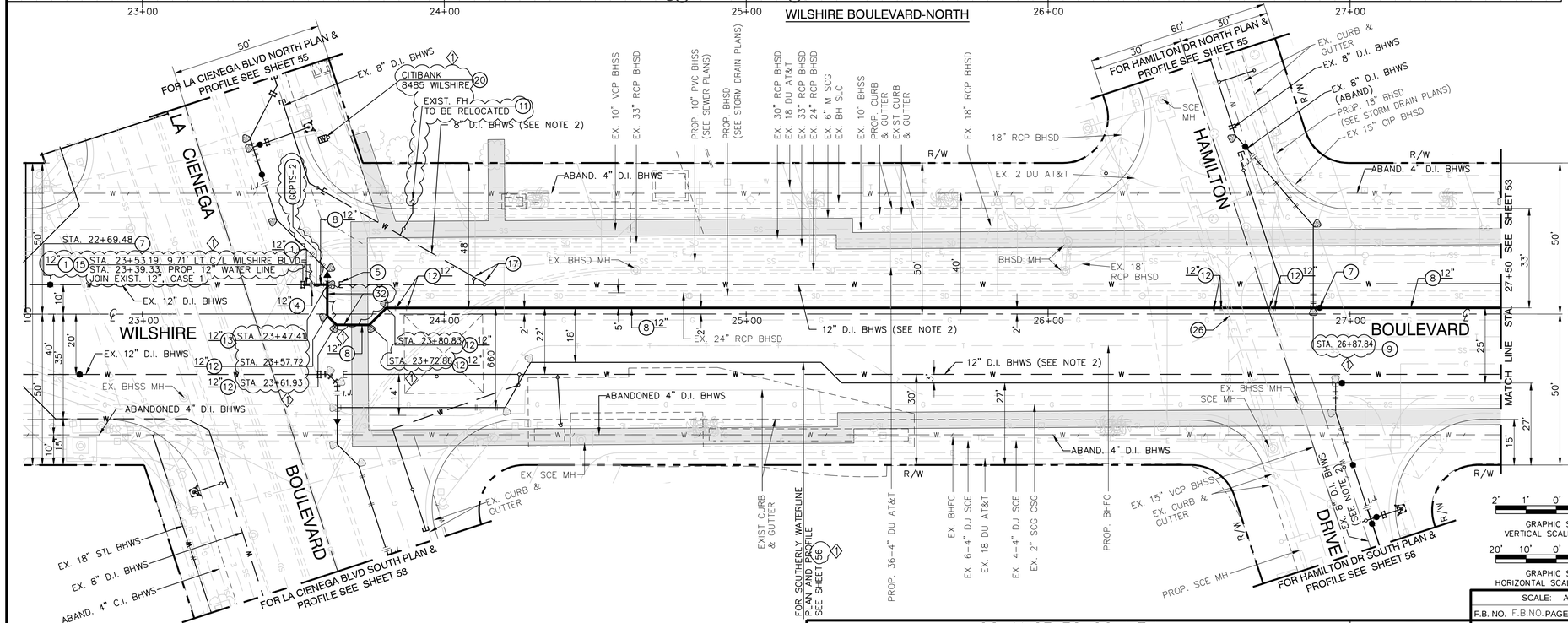

DATUMS:

THE BASIS OF HORIZONTAL CONTROL FOR THIS PROJECT IS THE CALIFORNIA COORDINATE SYSTEM NAD83 ZONE 5 (2007.0 EPOCH) DETERMINED LOCALLY BY THE FOLLOWING NGS POINTS: EW9587, EW9595 AND AA9327

ELEVATIONS ARE BASED ON THE NAVD 1988 – SPECIFICALLY CITY OF LOS ANGELES BENCHMARKS 12-16091, 13-13450 AND 13-13352 (2000 ADJ)

HORIZONTAL AND VERTICAL LOCATIONS TO BE VERIFIED IN THE FIELD AND ENGINEER NOTIFIED OF ANY DISCREPANCIES PRIOR TO CONSTRUCTION.

ABBREVIATIONS:

BH =CITY OF BEVERLY HILLS
EX. =EXISTING
J.C. =JUNCTION CHAMBER
N.I.C. =NOT IN CONTRACT
PROP. =PROPOSED
GCPTS =GALVANIC CATHODIC PROTECTION TEST STATION (1)

NOTE:

1. TRENCHING SHALL BE PER CITY STANDARD BH 710, MODIFIED WITH CLSM PER S.S.P.W.C. 201-6 SAND SLURRY BACKFILL. ALSO SEE TYPICAL TRENCH SECTION DETAIL AND TYPICAL SUBSTRUCTURE CROSSING DETAIL ON SHEET 55 FOR PIPE CLEARANCE TO EXISTING WATERLINE. INSTALL 2" BLOW-OFF ASSEMBLY AS REQUIRED FOR PRESSURE TESTING.
2. EXISTING WATER IS TO BE PROTECTED IN PLACE DURING CONSTRUCTION OF NEW WATER PIPE AND TO BE ABANDONED IN PLACE AFTER NEW WATER HAS BEEN PUT INTO SERVICE. ABANDONED WATER IS TO BE REMOVED BY OTHERS PER SEPARATE FUTURE CONTRACT.
3. EXISTING WATER MAIN DEPTH IS APPROXIMATE. THE CONTRACTOR IS TO CONFIRM THE ACTUAL PIPE LOCATION, VERTICAL AND HORIZONTAL, PRIOR TO CONSTRUCTION.
4. TO BE CONSTRUCTED PER C1056 ADVANCED UTILITY RELOCATIONS CONTRACT PACKAGE.
5. C1056 CONTRACTOR TO VERIFY STATUS OF UTILITY RELOCATIONS WITH THE OWNER.
6. FUTURE APPENDAGES AND STATION ENTRANCES ARE SHOWN FOR REFERENCE ONLY AND N.I.C.
7. HORIZONTAL STATIONING OF PROPOSED WATER LINES IS ALONG THE CENTERLINE OF PIPE. (1)

CONSTRUCTION NOTES:

(1) INSTALL 8" OR 12" DUCTILE IRON PIPE CLASS 52. SEE NOTE 1
(4) INSTALL 8" OR 12" PRE ASS'D INSULATING FLANGE TYPE I-E.
(5) CAP EXISTING LINE WITH CONCRETE MORTAR PER CITY STANDARD BH 708 AND ABANDON IN PLACE.
(7) INSTALL 12" BUTTERFLY VALVE (FLG X FLG), CLASS 150. INSTALL VALVE BOX ASSEMBLY PER CITY STANDARD PLAN BH 707.
(8) INSTALL 12-3/4" O.D. X ¼" EN. UC., C.L. & C., S.J. WELDED STEEL PIPE. SEE NOTE 1
(9) INSTALL 12" X 12" X 8" FLANGED STEEL TEE, WITH RESTRAINED JOINTS.
(11) REMOVE EXISTING F.H. ASSEMBLY, ON F.H. LATERAL, REMOVE F.H GATE VALVE, REMOVE AND DISPOSE OF EXISTING VALVE CAN AND COVER, CAP & PLUG EXISTING TEE. (1)
(12) INSTALL 8" OR 12" X 45° WELD STEEL ELBOW AND CONCRETE THRUST BLOCK.
(13) INSTALL 8" X 8" X 6" OR 12" X 12" X 12" FLANGED STEEL TEE, WITH RESTRAINED JOINTS.
(15) REMOVE INTERFERING PORTION OF EXISTING 8" OR 12" WATER MAIN. INSTALL 8" OR 12" DUCTILE IRON SPOOL (MJ X MJ), CLASS 52 WITH RESTRAINED JOINTS AND CONNECT TO EXISTING 8" OR 12" DUCTILE IRON PIPE. SEE SHEETS 52 THRU 55, CASE AS APPLICABLE. EXACT POINT OF CONNECTION TO BE FIELD VERIFIED BY THE CONTRACTOR.
(17) REMOVE AND DISPOSE OF EXISTING VALVE CAN COVER.
(20) EXISTING SERVICES SHALL BE REALIGNED AND RECONNECTED TO THEIR RESPECTIVE METER BOXES. MAINTAIN A MINIMUM 18" SEPARATION BETWEEN SERVICES.
(26) FIELD VERIFY AND EXPOSE 6-5" DU SCE DUCT IN 20" CASING. DETERMINE DEVIATIONS AND FORWARD TO METRO'S AUTHORIZED REPRESENTATIVE PRIOR TO CONSTRUCTING TEMPS. WATER MAINS.
(32) APPLY CATHODIC PROTECTION TO STEEL PIPE OUTSIDE OF EXCAVATION ZONE ONLY, SEE SHEET 65 FOR CATHODIC PROTECTION NOTES AND DETAILS.
(33) INSTALL 8" X 41° WELDED STEEL ELBOW
(34) INSTALL 8" X 22.5° WELDED STEEL ELBOW
(35) INSTALL 8" X 27° WELDED STEEL ELBOW (1)

GRAPHIC SCALE VERTICAL SCALE: 1" = 2'
GRAPHIC SCALE HORIZONTAL SCALE: 1" = 20'

C1056 AUR CONTRACT DRAWING NO. UW-011

PROJECT:
BEVERLY HILLS
WESTSIDE SUBWAY EXTENSION
ADVANCED UTILITY RELOCATIONS
WILSHIRE / LA CIENEGA STATION
TEMPORARY WATER RELOCATION
PLAN AND PROFILE
STA 27+50

SCALE: AS SHOWN
F.B. NO. F.B.NO.PAGE -- TO --

DESIGNED	C. MALDONADO	DATE 02/07/14
DRAWN	T. CABRERA	DATE 02/07/14
CHECKED	Z. MUDAR	DATE 02/07/14

DATE	DESCRIPTION	BY	REV
4/3/14	AMENDMENT 3	ZM	1
2/21/14	ISSUED FOR SOLICITATION	ZM	0

SUBMITTED _____ DATE _____
APPROVED _____ DATE _____
CITY ENGINEER

JOB NO. 1335
DRAWING NO. 7443
SHEET 52 OF 172 SHEET

CITY OF BEVERLY HILLS, CALIFORNIA
CIVIL ENGINEERING DEPARTMENT

Metro
LOS ANGELES COUNTY
METROPOLITAN TRANSPORTATION AUTHORITY
777 SOUTH FIGUEROA ST. 11TH FLOOR
LOS ANGELES, CA 90017
PREPARED UNDER THE SUPERVISION OF:
NAME: ZAFER MUDAR LIC. # C64154; EXPIRES 12/31/14 DATE

PARSONS BRINCKERHOFF

REGISTERED PROFESSIONAL ENGINEER ZAFER MUDAR No. C64154 EXPIRES: 12/31/2014 CIVIL STATE OF CALIFORNIA

Plotted by: Nadon,Roque
Plot Date & Time: 4/1/2014 2:51:10 PM
W:\PC Network Documents\C1056\UW011\DWG\PLANS & PROFILES\C1056UW011.DWG

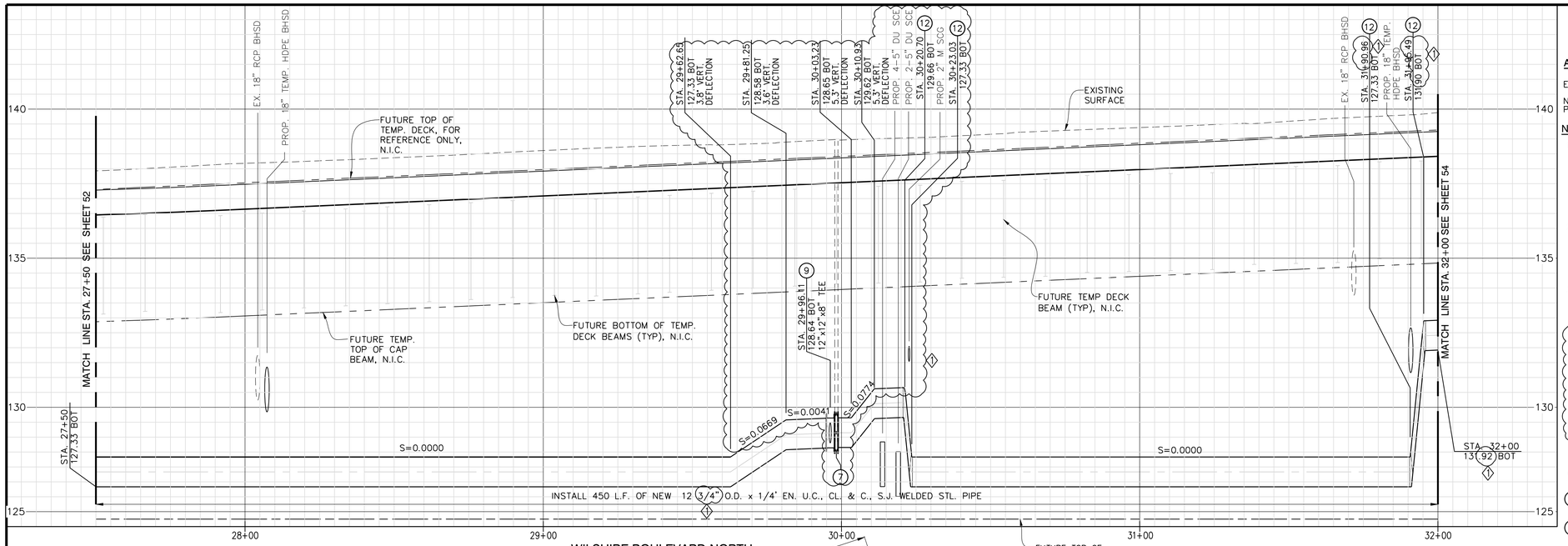

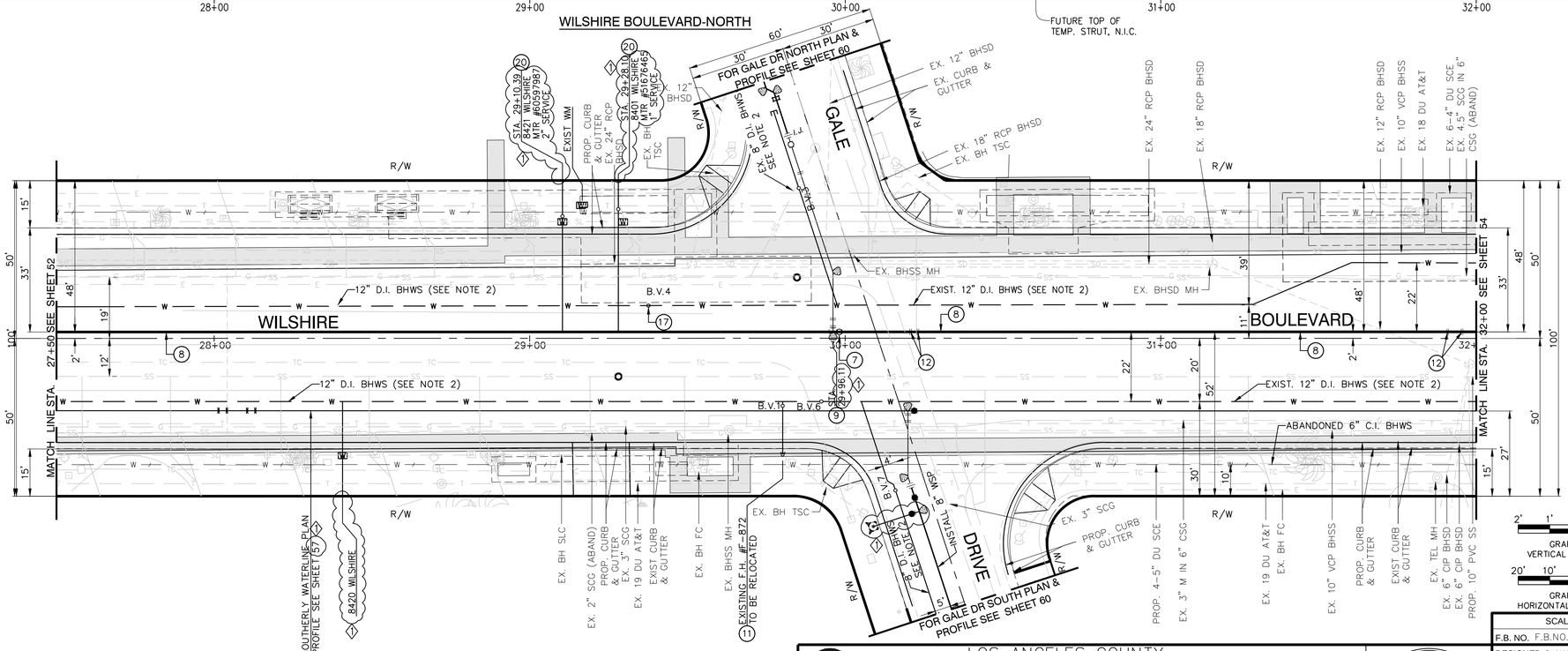

HORIZONTAL AND VERTICAL LOCATIONS TO BE VERIFIED IN THE FIELD AND ENGINEER NOTIFIED OF ANY DISCREPANCIES PRIOR TO CONSTRUCTION.

ABBREVIATIONS:

BH =CITY OF BEVERLY HILLS
EX. =EXISTING
J.C. =JUNCTION CHAMBER
N.I.C. =NOT IN CONTRACT
PROP. =PROPOSED

NOTE:

1. TRENCHING SHALL BE PER CITY STANDARD BH 710, MODIFIED WITH CLSM PER S.S.P.W.C. 201-6 SAND SLURRY BACKFILL. ALSO SEE TYPICAL TRENCH SECTION DETAIL AND TYPICAL SUBSTRUCTURE CROSSING DETAIL ON SHEET 55 FOR PIPE CLEARANCE TO EXISTING WATERLINE. INSTALL 2" BLOW-OFF ASSEMBLY AS REQUIRED FOR PRESSURE TESTING.
2. EXISTING WATER IS TO BE PROTECTED IN PLACE DURING CONSTRUCTION OF NEW WATER PIPE AND TO BE ABANDONED IN PLACE AFTER NEW WATER HAS BEEN PUT INTO SERVICE. ABANDONED WATER IS TO BE REMOVED BY OTHERS PER SEPARATE FUTURE CONTRACT.
3. EXISTING WATER MAIN DEPTH IS APPROXIMATE. THE CONTRACTOR IS TO CONFIRM THE ACTUAL PIPE LOCATION, VERTICAL AND HORIZONTAL, PRIOR TO CONSTRUCTION.
4. TO BE CONSTRUCTED PER C1056 ADVANCED UTILITY RELOCATIONS CONTRACT PACKAGE.
5. C1056 CONTRACTOR TO VERIFY STATUS OF UTILITY RELOCATIONS WITH THE OWNER.
6. FUTURE APPENDAGES AND STATION ENTRANCES ARE SHOWN FOR REFERENCE ONLY AND N.I.C.
7. HORIZONTAL STATIONING OF PROPOSED WATER LINES IS ALONG THE CENTERLINE OF PIPE.

CONSTRUCTION NOTES:

(7) INSTALL 12" BUTTERFLY VALVE (FLG X FLG), CLASS 150. INSTALL VALVE BOX ASSEMBLY PER CITY STANDARD PLAN BH 707.

(8) INSTALL 12-3/4" O.D. X 1/4" EN. UC., C.L. & C., S.J. WELDED STEEL PIPE. SEE NOTE 1

(9) INSTALL 12" X 12" X 8" FLANGED STEEL TEE, WITH RESTRAINED JOINTS.

(11) REMOVE EXISTING F.H. ASSEMBLY, ON F.H. LATERAL, REMOVE F.H GATE VALVE, REMOVE AND DISPOSE OF EXISTING VALVE CAN AND COVER, CAP & PLUG EXISTING TEE.

(12) INSTALL 8" OR 12" X 45° WELD STEEL ELBOW AND CONCRETE THRUST BLOCK.

(17) REMOVE AND DISPOSE OF EXISTING VALVE CAN COVER.

(20) EXISTING SERVICES SHALL BE REALIGNED AND RECONNECTED TO THEIR RESPECTIVE METER BOXES. MAINTAIN A MINIMUM 18" SEPARATION BETWEEN SERVICES.

DATUMS:

THE BASIS OF HORIZONTAL CONTROL FOR THIS PROJECT IS THE CALIFORNIA COORDINATE SYSTEM NAD83 ZONE 5 (2007.0 EPOCH) DETERMINED LOCALLY BY THE FOLLOWING NGS POINTS: EW9587, EW9595 AND AA9327

ELEVATIONS ARE BASED ON THE NAVD 1988 – SPECIFICALLY CITY OF LOS ANGELES BENCHMARKS 12-16091, 13-13450 AND 13-13352 (2000 ADJ)

GRAPHIC SCALE VERTICAL SCALE: 1" = 2'
GRAPHIC SCALE HORIZONTAL SCALE: 1" = 20'

C1056 AUR CONTRACT DRAWING NO. UW-012

PROJECT:
BEVERLY HILLS
WESTSIDE SUBWAY EXTENSION
ADVANCED UTILITY RELOCATIONS
WILSHIRE / LA CIENEGA STATION
TEMPORARY WATER RELOCATION
PLAN AND PROFILE
STA 27+50 TO STA 32+00

Metro
LOS ANGELES COUNTY METROPOLITAN TRANSPORTATION AUTHORITY
777 SOUTH FIGUEROA ST. 11TH FLOOR
LOS ANGELES, CA 90017

PARSONS BRINCKERHOFF
PREPARED UNDER THE SUPERVISION OF:
NAME: ZAFER MUDAR LIC. # C64154; EXPIRES 12/31/14 DATE

REGISTERED PROFESSIONAL ENGINEER ZAFER MUDAR No. C64154 EXPIRES: 12/31/2014 CIVIL STATE OF CALIFORNIA

SCALE: AS SHOWN			
F.B. NO. F.B.NO.PAGE -- TO --			
DESIGNED C. MALDONADO	DATE 02/07/14		
DRAWN T. CABRERA	DATE 02/07/14		
CHECKED Z. MUDAR	DATE 02/07/14		
4/3/14	AMENDMENT 3	ZM	1
2/21/14	ISSUED FOR SOLICITATION	ZM	0
DATE	DESCRIPTION	BY	REV

SUBMITTED _____ DATE _____
APPROVED _____ DATE _____
CITY ENGINEER

JOB NO. 1335 DRAWING NO. 7443
SHEET 53 OF 172 SHEET

CITY OF BEVERLY HILLS, CALIFORNIA
CIVIL ENGINEERING DEPARTMENT

DWG: Hardcopy L:\LA\WBW\WA-CBM\CADD\VZ_UTILITIES\OTW\BH\BHWATER\PLANS & PROFILES\C1056UW012.DWG Plot Date & Time: 4/1/2014 2:51:19 PM Plotted by: Nadon,Roque

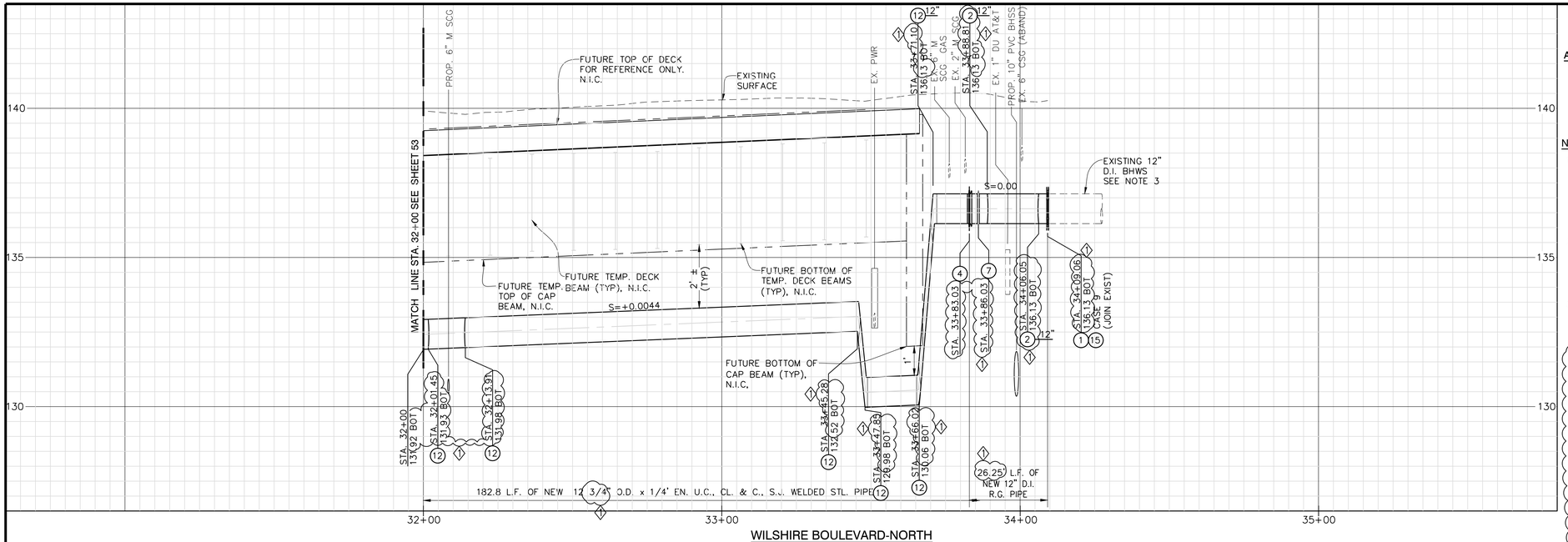

WILSHIRE BOULEVARD-NORTH

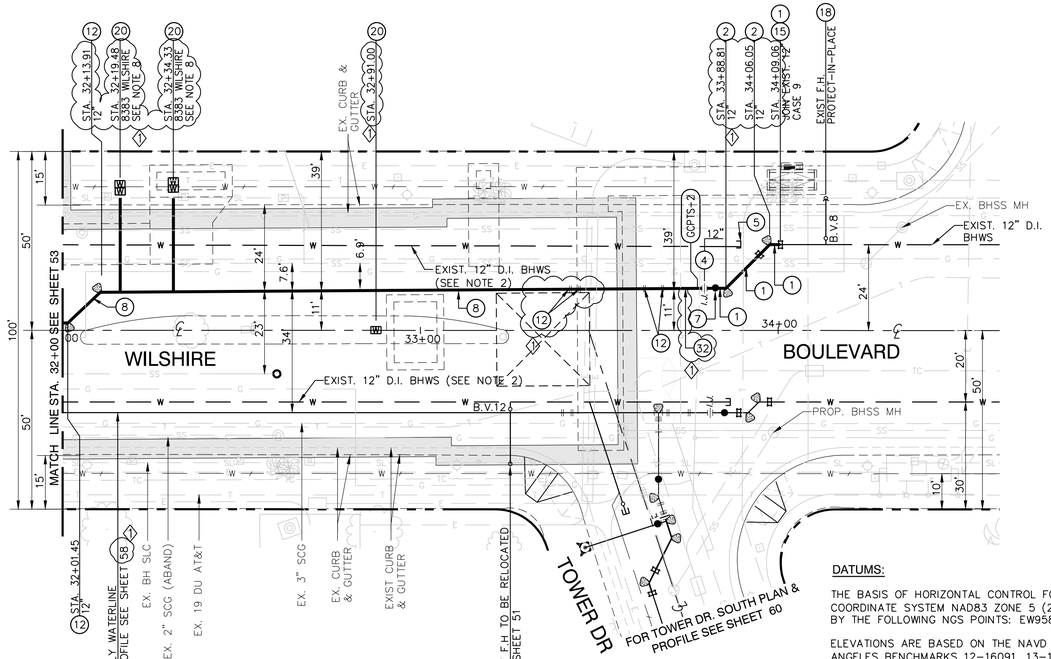

HORIZONTAL AND VERTICAL LOCATIONS TO BE VERIFIED IN THE FIELD AND ENGINEER NOTIFIED OF ANY DISCREPANCIES PRIOR TO CONSTRUCTION.

ABBREVIATIONS:

BH =CITY OF BEVERLY HILLS
EX =EXISTING
J.C. =JUNCTION CHAMBER
N.I.C. =NOT IN CONTRACT
PROP =PROPOSED
GCPTS =GALVANIC CATHODIC PROTECTION TEST STATION

NOTE:

1. TRENCHING SHALL BE PER CITY STANDARD BH 710, MODIFIED WITH CLSM PER S.S.P.W.C. 201-6 SAND SLURRY BACKFILL. ALSO SEE TYPICAL TRENCH SECTION DETAIL AND TYPICAL SUBSTRUCTURE CROSSING DETAIL ON SHEET 55 FOR PIPE CLEARANCE TO EXISTING WATERLINE. INSTALL 2" BLOW-OFF ASSEMBLY AS REQUIRED FOR PRESSURE TESTING.
2. EXISTING WATER IS TO BE PROTECTED IN PLACE DURING CONSTRUCTION OF NEW WATER PIPE AND TO BE ABANDONED IN PLACE AFTER NEW WATER HAS BEEN PUT INTO SERVICE. ABANDONED WATER IS TO BE REMOVED BY OTHERS PER SEPARATE FUTURE CONTRACT.
3. EXISTING WATER MAIN DEPTH IS APPROXIMATE. THE CONTRACTOR IS TO CONFIRM THE ACTUAL PIPE LOCATION, VERTICAL AND HORIZONTAL, PRIOR TO CONSTRUCTION.
4. TO BE CONSTRUCTED PER C1056 ADVANCED UTILITY RELOCATIONS CONTRACT PACKAGE.
5. C1056 CONTRACTOR TO VERIFY STATUS OF UTILITY RELOCATIONS WITH THE OWNER.
6. FUTURE APPENDAGES AND STATION ENTRANCES ARE SHOWN FOR REFERENCE ONLY AND N.I.C.
7. HORIZONTAL STATIONING OF PROPOSED WATER LINES IS ALONG THE CENTERLINE OF PIPE.
8. CONTRACTOR TO CONFIRM SIZE AND EXACT LOCATION OF THE FOLLOWING WATER METERS PRIOR TO REINSTATING SERVICES:
   FOR ADDRESS 8383 WILSHIRE BLVD.,
   MTR #70200926H
   MTR #70200929L
   MTR #87160246
   (3/4" SERVICE, 1" SERVICE & 6" SERVICE)
   SEE DETAIL 21 ON SHEET 66 FOR 6" SERVICE RECONNECTON.

CONSTRUCTION NOTES:

(1) INSTALL 8" OR 12" DUCTILE IRON PIPE CLASS 52. SEE NOTE 1
(2) INSTALL 8" OR 12" DUCTILE IRON PIPE 45° ANGLE FITTINGS (MJ X MJ) CLASS 52, WITH RESTRAINED JOINTS. INSTALL THRUST BLOCK.
(4) INSTALL 8" OR 12" PRE ASS'D INSULATING FLANGE TYPE I-E.
(5) CAP EXISTING LINE WITH CONCRETE MORTAR PER CITY STANDARD BH 708 AND ABANDON IN PLACE.
(7) INSTALL 12" BUTTERFLY VALVE (FLG X FLG), CLASS 150. INSTALL VALVE BOX ASSEMBLY PER CITY STANDARD PLAN BH 707.
(8) INSTALL 12-3/4" O.D. X ¼" EN. UC., C.L. & C., S.J. WELDED STEEL PIPE. SEE NOTE 1
(12) INSTALL 8" OR 12" X 45° WELD STEEL ELBOW AND CONCRETE THRUST BLOCK.
(15) REMOVE INTERFERING PORTION OF EXISTING 8" OR 12" WATER MAIN. INSTALL 8" OR 12" DUCTILE IRON SPOOL (MJ X MJ), CLASS 52 WITH RESTRAINED JOINTS AND CONNECT TO EXISTING 8" OR 12" DUCTILE IRON PIPE. SEE DWGS UW20 THRU UW23, CASE AS APPLICABLE. EXACT POINT OF CONNECTION TO BE FIELD VERIFIED BY THE CONTRACTOR.
(18) PROTECT IN PLACE EXISTING FIRE HYDRANT, VALVE, ETC.
(20) EXISTING SERVICES SHALL BE REALIGNED AND RECONNECTED TO THEIR RESPECTIVE METER BOXES. MAINTAIN A MINIMUM 18" SEPARATION BETWEEN SERVICES PER.
(32) APPLY CATHODIC PROTECTION TO STEEL PIPE OUTSIDE OF EXCAVATION ZONE ONLY. SEE SHEET 65 FOR CATHODIC PROTECTION NOTES AND DETAILS.

DATUMS:

THE BASIS OF HORIZONTAL CONTROL FOR THIS PROJECT IS THE CALIFORNIA COORDINATE SYSTEM NAD83 ZONE 5 (2007.0 EPOCH) DETERMINED LOCALLY BY THE FOLLOWING NGS POINTS: EW9587, EW9595 AND AA9327

ELEVATIONS ARE BASED ON THE NAVD 1988 – SPECIFICALLY CITY OF LOS ANGELES BENCHMARKS 12-16091, 13-13450 AND 13-13352 (2000 ADJ)

GRAPHIC SCALE VERTICAL SCALE: 1" = 2'
GRAPHIC SCALE HORIZONTAL SCALE: 1" = 20'

C1056 AUR CONTRACT DRAWING NO. UW-013

PROJECT:
BEVERLY HILLS
WESTSIDE SUBWAY EXTENSION
ADVANCED UTILITY RELOCATIONS
WILSHIRE / LA CIENEGA STATION
TEMPORARY WATER RELOCATION
PLAN AND PROFILE
STA 32+00

SCALE: AS SHOWN
F.B. NO. F.B.NO. PAGE -- TO --

DESIGNED	C. MALDONADO	DATE	02/07/14
DRAWN	T. CABRERA	DATE	02/07/14
CHECKED	Z. MUDAR	DATE	02/07/14

DATE	DESCRIPTION	BY	REV
4/3/14	AMENDMENT 3	ZM	1
2/21/14	ISSUED FOR SOLICITATION	ZM	0

SUBMITTED _____ DATE _____
CITY ENGINEER
APPROVED _____ DATE _____

JOB NO. 1335
DRAWING NO. 7443
SHEET 54 OF 172 SHEET

CITY OF BEVERLY HILLS, CALIFORNIA
CIVIL ENGINEERING DEPARTMENT

Metro
PARSONS BRINCKERHOFF

LOS ANGELES COUNTY
METROPOLITAN TRANSPORTATION AUTHORITY

777 SOUTH FIGUEROA ST. 11TH FLOOR
LOS ANGELES, CA 90017

PREPARED UNDER THE SUPERVISION OF:

NAME: ZAFER MUDAR LIC. # C64154; EXPIRES 12/31/14 DATE

REGISTERED PROFESSIONAL ENGINEER ZAFER MUDAR No. C64154 EXPIRES: 12/31/2014 CIVIL STATE OF CALIFORNIA

Plotted by: Nadon,Kaque Plot Date & Time: 4/7/2014 2:51:24 PM
DWG Filename: L:\LAWSBM\WAREM\CADD\V12_UTILITIES\UTIL\BH\BHWATERPLANS & PROFILES\C1056UW013.DWG

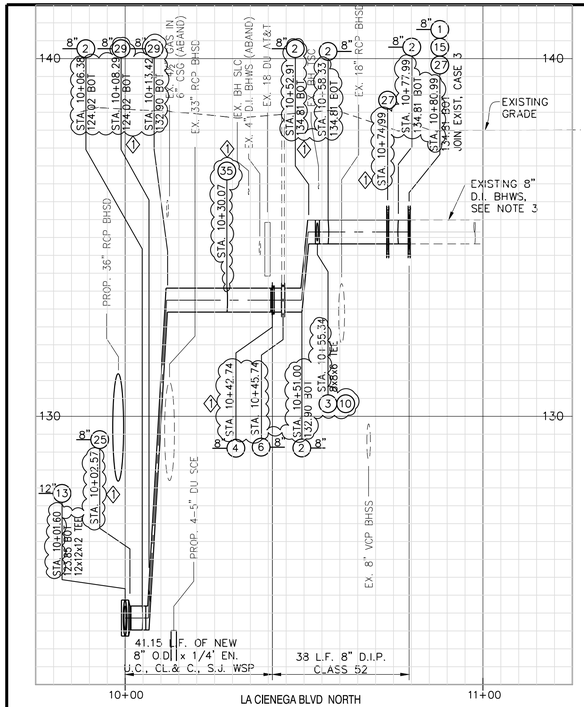

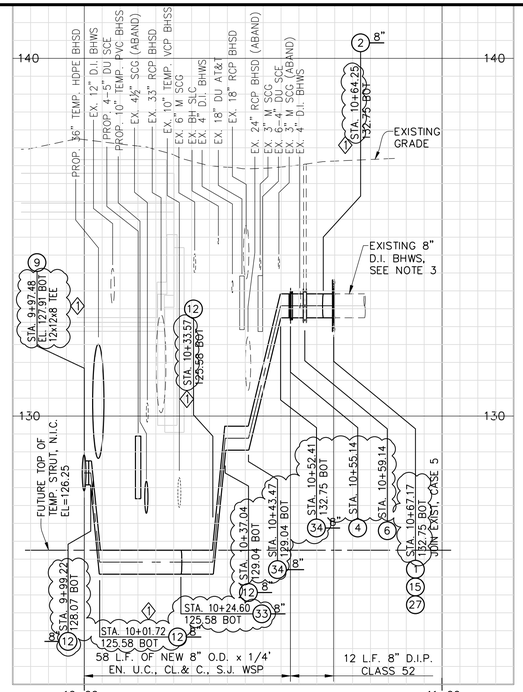

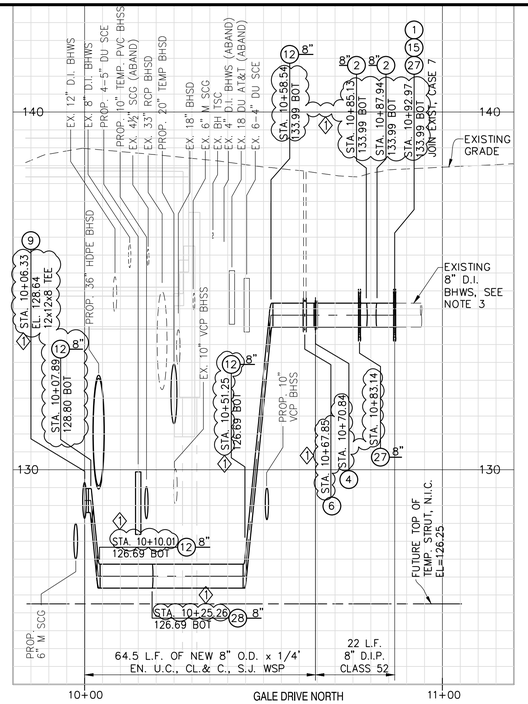

HORIZONTAL AND VERTICAL LOCATIONS TO BE VERIFIED IN THE FIELD AND ENGINEER NOTIFIED OF ANY DISCREPANCIES PRIOR TO CONSTRUCTION.

ABBREVIATIONS:

BH =CITY OF BEVERLY HILLS
EX. =EXISTING
J.C. =JUNCTION CHAMBER
N.I.C. =NOT IN CONTRACT
PROP. =PROPOSED
CCPTS =GALVANIC CATHODIC PROTECTION TEST STATION (1)

NOTE:

1. TRENCHING SHALL BE PER CITY STANDARD BH 710, MODIFIED WITH CLSM PER S.S.P.W.C. 201-6 SAND SLURRY BACKFILL. ALSO SEE TYPICAL TRENCH SECTION DETAIL AND TYPICAL SUBSTRUCTURE CROSSING DETAIL ON SHEET 55 FOR PIPE CLEARANCE TO EXISTING WATERLINE. INSTALL 2" BLOW-OFF ASSEMBLY AS REQUIRED FOR PRESSURE TESTING.
2. EXISTING WATER IS TO BE PROTECTED IN PLACE DURING CONSTRUCTION OF NEW WATER PIPE AND TO BE ABANDONED IN PLACE AFTER NEW WATER HAS BEEN PUT INTO SERVICE. ABANDONED WATER IS TO BE REMOVED BY OTHERS PER SEPARATE FUTURE CONTRACT.
3. EXISTING WATER MAIN DEPTH IS APPROXIMATE. THE CONTRACTOR IS TO CONFIRM THE ACTUAL PIPE LOCATION, VERTICAL AND HORIZONTAL, PRIOR TO CONSTRUCTION.
4. TO BE CONSTRUCTED PER C1056 ADVANCED UTILITY RELOCATIONS CONTRACT PACKAGE.
5. C1056 CONTRACTOR TO VERIFY STATUS OF UTILITY RELOCATIONS WITH THE OWNER.
6. FUTURE APPENDAGES AND STATION ENTRANCES ARE SHOWN FOR REFERENCE ONLY AND N.I.C.
7. HORIZONTAL STATIONING OF PROPOSED WATER LINES IS ALONG THE CENTERLINE OF PIPE. (7)

CONSTRUCTION NOTES:

(1) INSTALL 8" OR 12" DUCTILE IRON PIPE CLASS 52. SEE NOTE 1
(2) INSTALL 8" OR 12" DUCTILE IRON PIPE 45° ANGLE FITTINGS (MJ X MJ) CLASS 52, WITH RESTRAINED JOINTS. INSTALL THRUST BLOCK.
(3) INSTALL 8"X8"X6" DUCTILE IRON PIPE TEE (MJ X FLG) FITTING CLASS 52, WITH RESTRAINED JOINTS PER CITY STANDARD BH 705 FOR FIRE HYDRANTS.
(4) INSTALL 8" OR 12" PRE ASS'D INSULATING FLANGE TYPE I-E.
(5) CAP EXISTING LINE WITH CONCRETE MORTAR PER CITY STANDARD BH 708 AND ABANDON IN PLACE.
(6) INSTALL 8" BUTTERFLY VALVE (FLG X FLG), CLASS 150. INSTALL VALVE BOX ASSEMBLY PER CITY STANDARD PLAN BH 707.
(9) INSTALL 12" X 12" X 8" FLANGED STEEL TEE, WITH RESTRAINED JOINTS.
(10) INSTALLATION OF FIRE HYDRANT PER CITY STANDARD BH 703 & BH 705
(12) INSTALL 8" OR 12" X 45° WELD STEEL ELBOW AND CONCRETE THRUST BLOCK.
(13) INSTALL 8" X 8" X 6" OR 12" X 12" X 12" FLANGED STEEL TEE, WITH RESTRAINED JOINTS.
(14) INSTALL 8-5/8" O.D. X ¾" EN. U.C., C.L. & C., S.J. WELDED STEEL PIPE. SEE NOTE 1.
(15) REMOVE INTERFERING PORTION OF EXISTING 8" OR 12" WATER MAIN. INSTALL 8" OR 12" DUCTILE IRON SPOOL (MJ X MJ), CLASS 52 WITH RESTRAINED JOINTS AND CONNECT TO EXISTING 8" OR 12" DUCTILE IRON PIPE. SEE SHEETS 52 THRU 55, CASE AS APPLICABLE. EXACT POINT OF CONNECTION TO BE FIELD VERIFIED BY THE CONTRACTOR.
(17) REMOVE AND DISPOSE OF EXISTING VALVE CAN COVER.
(18) PROTECT IN PLACE EXISTING FIRE HYDRANT, VALVE, ETC.
(25) INSTALL 12" X 8" REDUCER
(27) INSTALL 6", 8" OR 12" COMPRESSION COUPLING.
(28) INSTALL 8" X 18.1° WELDED STEEL ELBOW
(29) INSTALL 8" X 60° WELDED STEEL ELBOW
(32) APPLY CATHODIC PROTECTION TO STEEL PIPE OUTSIDE OF EXCAVATION ZONE ONLY. SEE SHEET 65 FOR CATHODIC PROTECTION NOTES AND DETAILS. (1)
(33) INSTALL 8" X 41° WELDED STEEL ELBOW
(34) INSTALL 8" X 22.5° WELDED STEEL ELBOW
(35) INSTALL 8" X 27° WELDED STEEL ELBOW

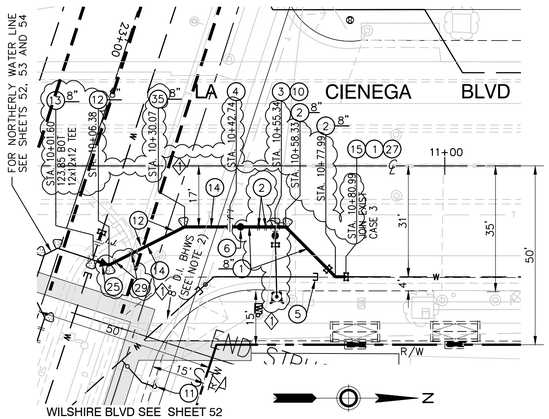

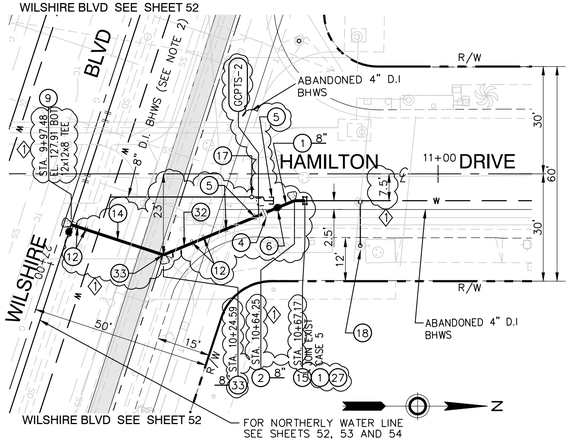

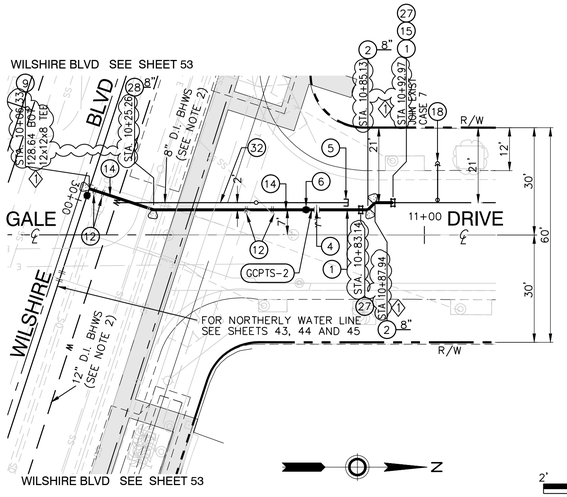

2' 1' 0' 2'
GRAPHIC SCALE
VERTICAL SCALE: 1" = 2'

20' 10' 0' 20'
GRAPHIC SCALE
HORIZONTAL SCALE: 1" = 20'

C1056 AUR CONTRACT DRAWING NO. UW-014

PROJECT:
BEVERLY HILLS
WESTSIDE SUBWAY EXTENSION
ADVANCED UTILITY RELOCATIONS
WILSHIRE / LA CIENEGA STATION
TEMPORARY WATER RELOCATION
PLAN AND PROFILE
STA 10+00 TO STA 11+00

SCALE: AS SHOWN
F.B. NO. F.B.NO. PAGE -- TO --

DESIGNED	C. MALDONADO	DATE	02/07/14
DRAWN	T. CABRERA	DATE	02/07/14
CHECKED	Z. MUDAR	DATE	02/07/14

DATE	DESCRIPTION	BY	REV
4/3/14	AMENDMENT 3	ZM	1
2/21/14	ISSUED FOR SOLICITATION	ZM	0

SUBMITTED _____ DATE _____
APPROVED _____ DATE _____
CITY ENGINEER

JOB NO. 1335
DRAWING NO. 7443
SHEET 55 OF 172 SHEET

CITY OF BEVERLY HILLS, CALIFORNIA
CIVIL ENGINEERING DEPARTMENT

DATUMS:

THE BASIS OF HORIZONTAL CONTROL FOR THIS PROJECT IS THE CALIFORNIA COORDINATE SYSTEM NAD83 ZONE 5 (2007.0 EPOCH) DETERMINED LOCALLY BY THE FOLLOWING NGS POINTS: EW9587, EW9595 AND AA9327

ELEVATIONS ARE BASED ON THE NAVD 1988 - SPECIFICALLY CITY OF LOS ANGELES BENCHMARKS 12-16091, 13-13450 AND 13-13352 (2000 ADJ)

Metro
PARSONS BRINCKERHOFF

LOS ANGELES COUNTY
METROPOLITAN TRANSPORTATION AUTHORITY

777 SOUTH FIGUEROA ST. 11TH FLOOR
LOS ANGELES, CA 90017

PREPARED UNDER THE SUPERVISION OF:

NAME: ZAFER MUDAR LIC. # C64154; EXPIRES 12/31/14 DATE

REGISTERED PROFESSIONAL ENGINEER
ZAFER MUDAR
No. C64154
EXPIRES: 12/31/2014
CIVIL
STATE OF CALIFORNIA

Plotted by: Nadon,Roque Plot Date & Time: 4/1/2014 2:51:38 PM
W:\0_Metrone L:\AWSBIM\WAC8IM\CADD\Y2_CIVIL\FILES\CVTPO\FBH\SHWA1ER\PLANS & PROFILES\C1056UW014.DWG

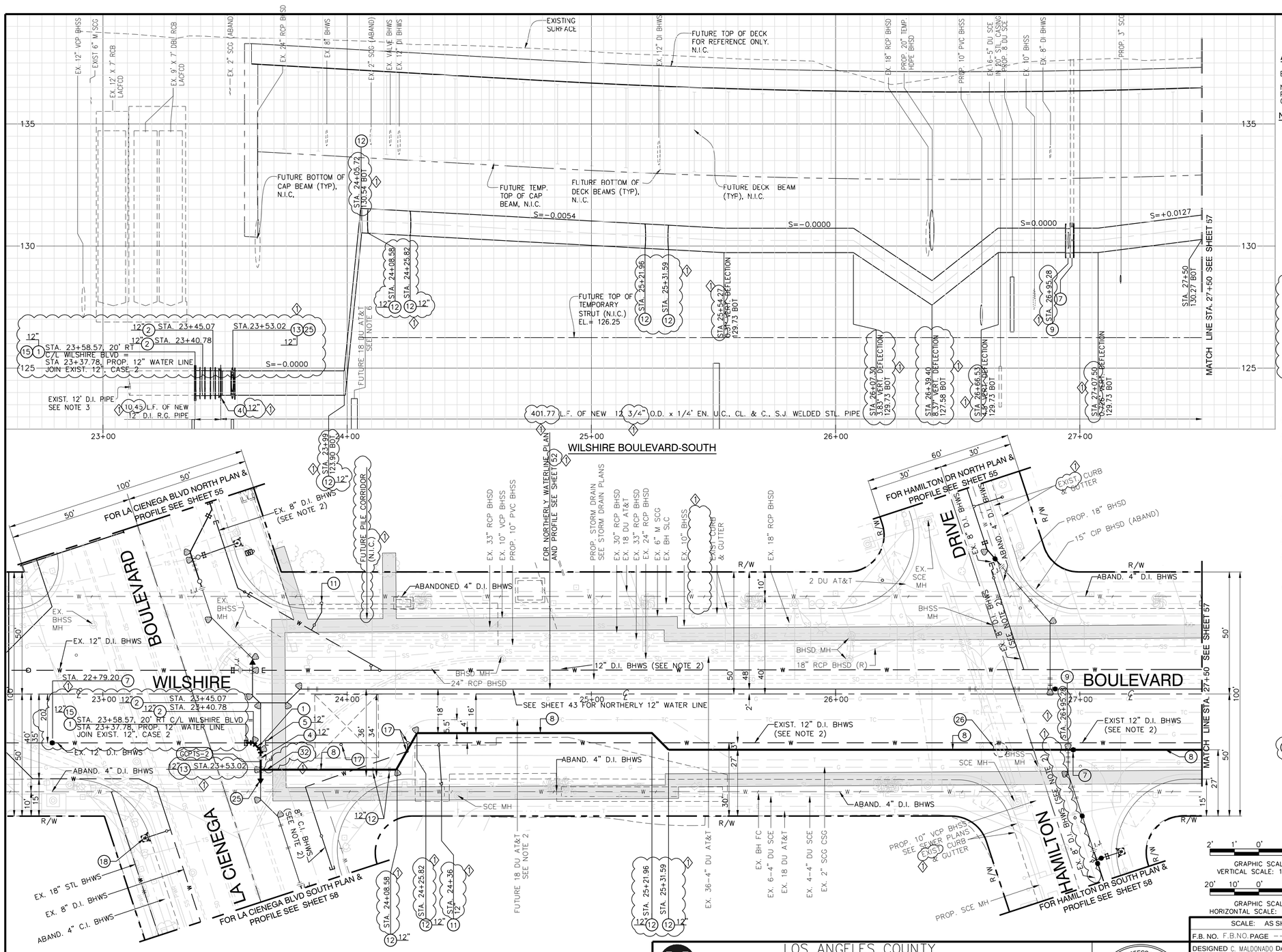

HORIZONTAL AND VERTICAL LOCATIONS TO BE VERIFIED IN THE FIELD AND ENGINEER NOTIFIED OF ANY DISCREPANCIES PRIOR TO CONSTRUCTION.

ABBREVIATIONS:

BH =CITY OF BEVERLY HILLS
EX. =EXISTING
J.C. =JUNCTION CHAMBER
N.I.C. =NOT IN CONTRACT
PROP =PROPOSED
GCPTS =GALVANIC CATHODIC PROTECTION TEST STATION

NOTE:

1. TRENCHING SHALL BE PER CITY STANDARD BH 710, MODIFIED WITH CLSM PER S.S.P.W.C. 201-6 SAND SLURRY BACKFILL. ALSO SEE TYPICAL TRENCH SECTION DETAIL AND TYPICAL SUBSTRUCTURE CROSSING DETAIL ON SHEET 55 FOR PIPE CLEARANCE TO EXISTING WATERLINE. INSTALL 2" BLOW-OFF ASSEMBLY AS REQUIRED FOR PRESSURE TESTING.
2. EXISTING WATER IS TO BE PROTECTED IN PLACE DURING CONSTRUCTION OF NEW WATER PIPE AND TO BE ABANDONED IN PLACE AFTER NEW WATER HAS BEEN PUT INTO SERVICE. ABANDONED WATER IS TO BE REMOVED BY OTHERS PER SEPARATE FUTURE CONTRACT.
3. EXISTING WATER MAIN DEPTH IS APPROXIMATE. THE CONTRACTOR IS TO CONFIRM THE ACTUAL PIPE LOCATION, VERTICAL AND HORIZONTAL, PRIOR TO CONSTRUCTION.
4. TO BE CONSTRUCTED PER C1056 ADVANCED UTILITY RELOCATIONS CONTRACT PACKAGE.
5. C1056 CONTRACTOR TO VERIFY STATUS OF UTILITY RELOCATIONS WITH THE OWNER.
6. FUTURE APPENDAGES AND STATION ENTRANCES ARE SHOWN FOR REFERENCE ONLY AND N.I.C.
7. HORIZONTAL STATIONING OF PROPOSED WATER LINES IS ALONG THE CENTERLINE OF PIPE.

CONSTRUCTION NOTES:

(1) INSTALL 8" OR 12" DUCTILE IRON PIPE CLASS 52. SEE NOTE 1
(2) INSTALL 8" OR 12" DUCTILE IRON PIPE 45° ANGLE FITTINGS (MJ X MJ) CLASS 52, WITH RESTRAINED JOINTS. INSTALL THRUST BLOCK.
(4) INSTALL 8" OR 12" PRE ASS'D INSULATING FLANGE TYPE I-E.
(5) CAP EXISTING LINE WITH CONCRETE MORTAR PER CITY STANDARD BH 708 AND ABANDON IN PLACE.
(7) INSTALL 12" BUTTERFLY VALVE (FLG X FLG), CLASS 150. INSTALL VALVE BOX ASSEMBLY PER CITY STANDARD PLAN BH 707.
(8) INSTALL 12-3/4" O.D. X ¼" EN. UC., C.L. & C., S.J. WELDED STEEL PIPE. SEE NOTE 1
(9) INSTALL 12" X 12" X 8" FLANGED STEEL TEE, WITH RESTRAINED JOINTS.
(11) REMOVE EXISTING F.H. ASSEMBLY, ON F.H. LATERAL, REMOVE F.H GATE VALVE, REMOVE AND DISPOSE OF EXISTING VALVE CAN AND COVER, CAP & PLUG EXISTING TEE.
(12) INSTALL 8" OR 12" X 45° WELD STEEL ELBOW AND CONCRETE THRUST BLOCK.
(13) INSTALL 8" X 8" X 6" OR 12" X 12" X 12" FLANGED STEEL TEE, WITH RESTRAINED JOINTS.
(15) REMOVE INTERFERING PORTION OF EXISTING 8" OR 12" WATER MAIN. INSTALL 8" OR 12" DUCTILE IRON SPOOL (MJ X MJ), CLASS 52 WITH RESTRAINED JOINTS AND CONNECT TO EXISTING 8" OR 12" DUCTILE IRON PIPE. SEE DWGS UW20 THRU UW23, CASE AS APPLICABLE. EXACT POINT OF CONNECTION TO BE FIELD VERIFIED BY THE CONTRACTOR.
(17) REMOVE AND DISPOSE OF EXISTING VALVE CAN COVER.
(18) PROTECT IN PLACE EXISTING FIRE HYDRANT, VALVE, ETC.
(25) INSTALL 12" X 8" REDUCER
(26) FIELD VERIFY AND EXPOSE 6-5" DU SCE DUCT IN 20" CASING. DETERMINE DEVIATIONS AND FORWARD TO METRO'S AUTHORIZED REPRESENTATIVE PRIOR TO CONSTRUCTING TEMPS. WATER MAINS.
(32) APPLY CATHODIC PROTECTION TO STEEL PIPE OUTSIDE OF EXCAVATION ZONE ONLY. SEE SHEET 65 FOR CATHODIC PROTECTION NOTES AND DETAILS.

DATUMS:

THE BASIS OF HORIZONTAL CONTROL FOR THIS PROJECT IS THE CALIFORNIA COORDINATE SYSTEM NAD83 ZONE 5 (2007.0 EPOCH) DETERMINED LOCALLY BY THE FOLLOWING NGS POINTS: EW9587, EW9595 AND AA9327

ELEVATIONS ARE BASED ON THE NAVD 1988 – SPECIFICALLY CITY OF LOS ANGELES BENCHMARKS 12-16091, 13-13450 AND 13-13352 (2000 ADJ)

GRAPHIC SCALE VERTICAL SCALE: 1" = 2'
2' 1' 0' 2'

GRAPHIC SCALE HORIZONTAL SCALE: 1" = 20'
20' 10' 0' 20'

C1056 AUR CONTRACT DRAWING NO. UW-015

PROJECT:
BEVERLY HILLS
WESTSIDE SUBWAY EXTENSION
ADVANCED UTILITY RELOCATIONS
WILSHIRE / LA CIENEGA STATION
TEMPORARY WATER RELOCATION
PLAN AND PROFILE
STA 27+50

Metro
LOS ANGELES COUNTY METROPOLITAN TRANSPORTATION AUTHORITY
777 SOUTH FIGUEROA ST. 11TH FLOOR
LOS ANGELES, CA 90017
PREPARED UNDER THE SUPERVISION OF:
NAME: ZAFER MUDAR LIC. # C64154; EXPIRES 12/31/14 DATE

PARSONS BRINCKERHOFF

REGISTERED PROFESSIONAL ENGINEER ZAFER MUDAR No. C64154 EXPIRES: 12/31/2014 CIVIL STATE OF CALIFORNIA

SCALE:	AS SHOWN
F.B. NO.	F.B.NO.PAGE -- TO --
DESIGNED	C. MALDONADO DATE 02/07/14
DRAWN	T. CABRERA DATE 02/07/14
CHECKED	Z. MUDAR DATE 02/07/14

DATE	DESCRIPTION	BY	REV
4/3/14	AMENDMENT 3	ZM	1
2/21/14	ISSUED FOR SOLICITATION	ZM	0

SUBMITTED _____ DATE _____
APPROVED _____ DATE _____
CITY ENGINEER

JOB NO. 1335 DRAWING NO. 7443
SHEET 56 OF 172 SHEET

CITY OF BEVERLY HILLS, CALIFORNIA
CIVIL ENGINEERING DEPARTMENT

Plotted by: Nacio,Roque Plot Date & Time: 4/7/2014 2:51:44 PM
DWG Filename: C:\LAWSBM WA\CBA\CADD\12_DELIVERIES\OTHERS\BHWATER\PLANS & PROFILES\C1056UW015.DWG

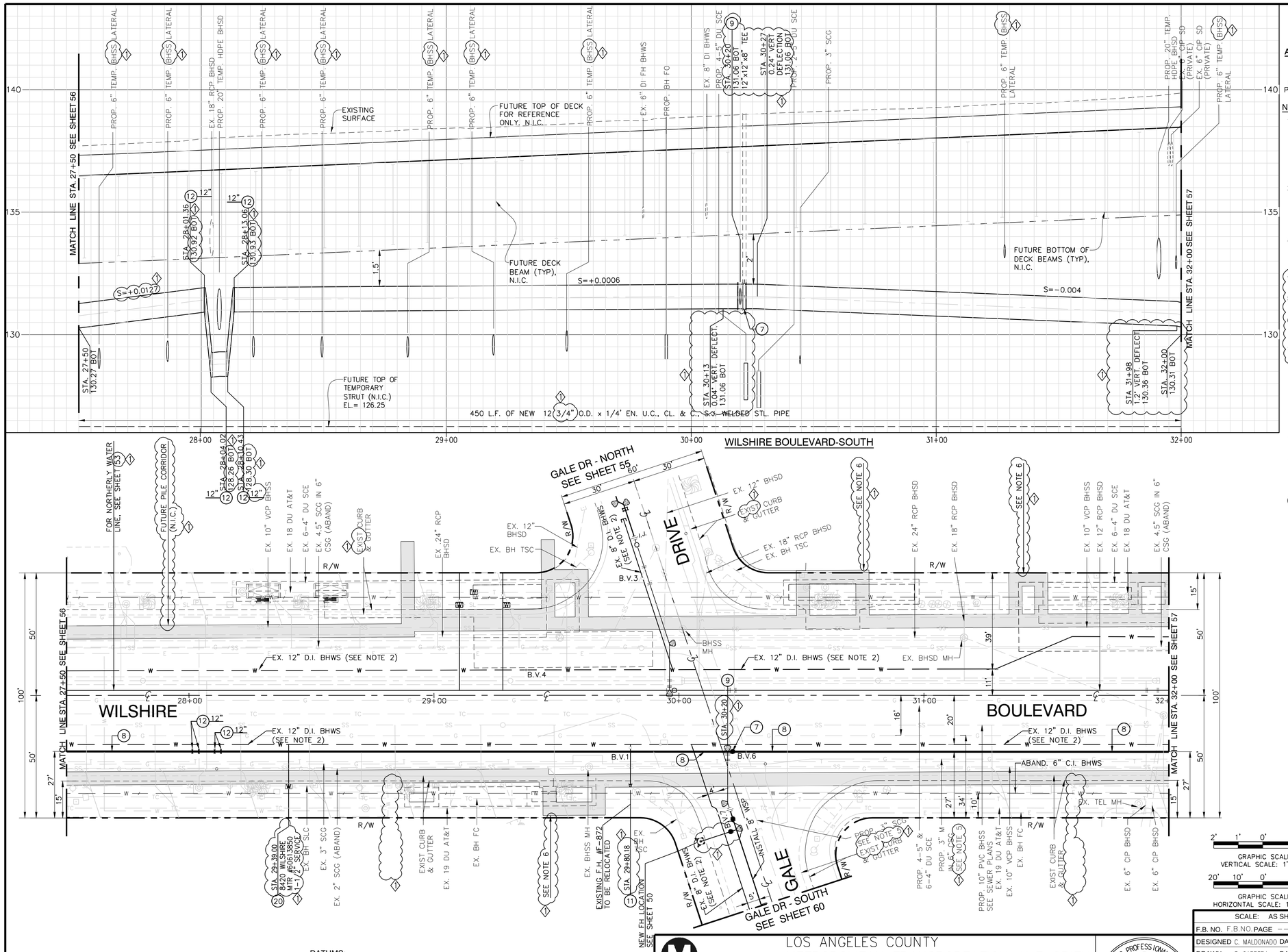

HORIZONTAL AND VERTICAL LOCATIONS TO BE VERIFIED IN THE FIELD AND ENGINEER NOTIFIED OF ANY DISCREPANCIES PRIOR TO CONSTRUCTION.

ABBREVIATIONS:

BH =CITY OF BEVERLY HILLS
EX. =EXISTING
J.C. =JUNCTION CHAMBER
N.I.C. =NOT IN CONTRACT
PROP. =PROPOSED

NOTE:

1. TRENCHING SHALL BE PER CITY STANDARD BH 710, MODIFIED WITH CLSM PER S.S.P.W.C. 201-6 SAND SLURRY BACKFILL. ALSO SEE TYPICAL TRENCH SECTION DETAIL AND TYPICAL SUBSTRUCTURE CROSSING DETAIL ON SHEET 55 FOR PIPE CLEARANCE TO EXISTING WATERLINE. INSTALL 2" BLOW-OFF ASSEMBLY AS REQUIRED FOR PRESSURE TESTING.
2. EXISTING WATER IS TO BE PROTECTED IN PLACE DURING CONSTRUCTION OF NEW WATER PIPE AND TO BE ABANDONED IN PLACE AFTER NEW WATER HAS BEEN PUT INTO SERVICE. ABANDONED WATER IS TO BE REMOVED BY OTHERS PER SEPARATE FUTURE CONTRACT.
3. EXISTING WATER MAIN DEPTH IS APPROXIMATE. THE CONTRACTOR IS TO CONFIRM THE ACTUAL PIPE LOCATION, VERTICAL AND HORIZONTAL, PRIOR TO CONSTRUCTION.
4. TO BE CONSTRUCTED PER C1056 ADVANCED UTILITY RELOCATIONS CONTRACT PACKAGE.
5. C1056 CONTRACTOR TO VERIFY STATUS OF UTILITY RELOCATIONS WITH THE OWNER.
6. FUTURE APPENDAGES AND STATION ENTRANCES ARE SHOWN FOR REFERENCE ONLY AND N.I.C.
7. HORIZONTAL STATIONING OF PROPOSED WATER LINES IS ALONG THE CENTERLINE OF PIPE.

CONSTRUCTION NOTES:

(7) INSTALL 12" BUTTERFLY VALVE (FLG X FLG), CLASS 150. INSTALL VALVE BOX ASSEMBLY PER CITY STANDARD PLAN BH 707.

(8) INSTALL 12-3/4" O.D. X ¼" EN. UC., C.L. & C., S.J. WELDED STEEL PIPE. SEE NOTE 1

(9) INSTALL 12" X 12" X 8" FLANGED STEEL TEE, WITH RESTRAINED JOINTS.

(11) REMOVE EXISTING F.H. ASSEMBLY, ON F.H. LATERAL, REMOVE F.H GATE VALVE, REMOVE AND DISPOSE OF EXISTING VALVE CAN AND COVER, CAP & PLUG EXISTING TEE

(12) INSTALL 8" OR 12" X 45° WELD STEEL ELBOW AND CONCRETE THRUST BLOCK.

(17) REMOVE AND DISPOSE OF EXISTING VALVE CAN COVER.

(20) EXISTING SERVICES SHALL BE REALIGNED AND RECONNECTED TO THEIR RESPECTIVE METER BOXES. MAINTAIN A MINIMUM 18" SEPARATION BETWEEN SERVICES.

DATUMS:

THE BASIS OF HORIZONTAL CONTROL FOR THIS PROJECT IS THE CALIFORNIA COORDINATE SYSTEM NAD83 ZONE 5 (2007.0 EPOCH) DETERMINED LOCALLY BY THE FOLLOWING NGS POINTS: EW9587, EW9595 AND AA9327

ELEVATIONS ARE BASED ON THE NAVD 1988 – SPECIFICALLY CITY OF LOS ANGELES BENCHMARKS 12-16091, 13-13450 AND 13-13352 (2000 ADJ)

GRAPHIC SCALE VERTICAL SCALE: 1" = 2'
2' 1' 0' 2'

GRAPHIC SCALE HORIZONTAL SCALE: 1" = 20'
20' 10' 0' 20'

N

C1056 AUR CONTRACT DRAWING NO. UW-016

Metro
PARSONS BRINCKERHOFF

LOS ANGELES COUNTY METROPOLITAN TRANSPORTATION AUTHORITY
777 SOUTH FIGUEROA ST. 11TH FLOOR
LOS ANGELES, CA 90017

PREPARED UNDER THE SUPERVISION OF:

NAME: ZAFER MUDAR LIC. # C64154; EXPIRES 12/31/14 DATE

REGISTERED PROFESSIONAL ENGINEER ZAFER MUDAR No. C64154 EXPIRES: 12/31/2014 CIVIL STATE OF CALIFORNIA

SCALE: AS SHOWN			
F.B. NO. F.B.NO. PAGE -- TO --			
DESIGNED C. MALDONADO DATE 02/07/14			
DRAWN T. CABRERA DATE 02/07/14			
CHECKED Z. MUDAR DATE 02/07/14			
4/3/14	AMENDMENT 3	ZM	1
2/21/14	ISSUED FOR SOLICITATION	ZM	0
DATE	DESCRIPTION	BY	REV

PROJECT: BEVERLY HILLS
WESTSIDE SUBWAY EXTENSION
ADVANCED UTILITY RELOCATIONS
WILSHIRE / LA CIENEGA STATION
TEMPORARY WATER RELOCATION
PLAN AND PROFILE
STA 27+50 TO STA 32+00

SUBMITTED _____ DATE _____
CITY ENGINEER
APPROVED _____ DATE _____

JOB NO. 1335 DRAWING NO. 7443
SHEET 57 OF 172 SHEET

CITY OF BEVERLY HILLS, CALIFORNIA
CIVIL ENGINEERING DEPARTMENT

DWG filename: L:\LAWSBM\WA\BM\CADD\T2_UTILITIES\CITY OF BH\BHWATER\PLANS & PROFILES\C1056UW016.DWG Plot Date & Time: 4/1/2014 2:51:48 PM Plotted by: Nadon,Roque

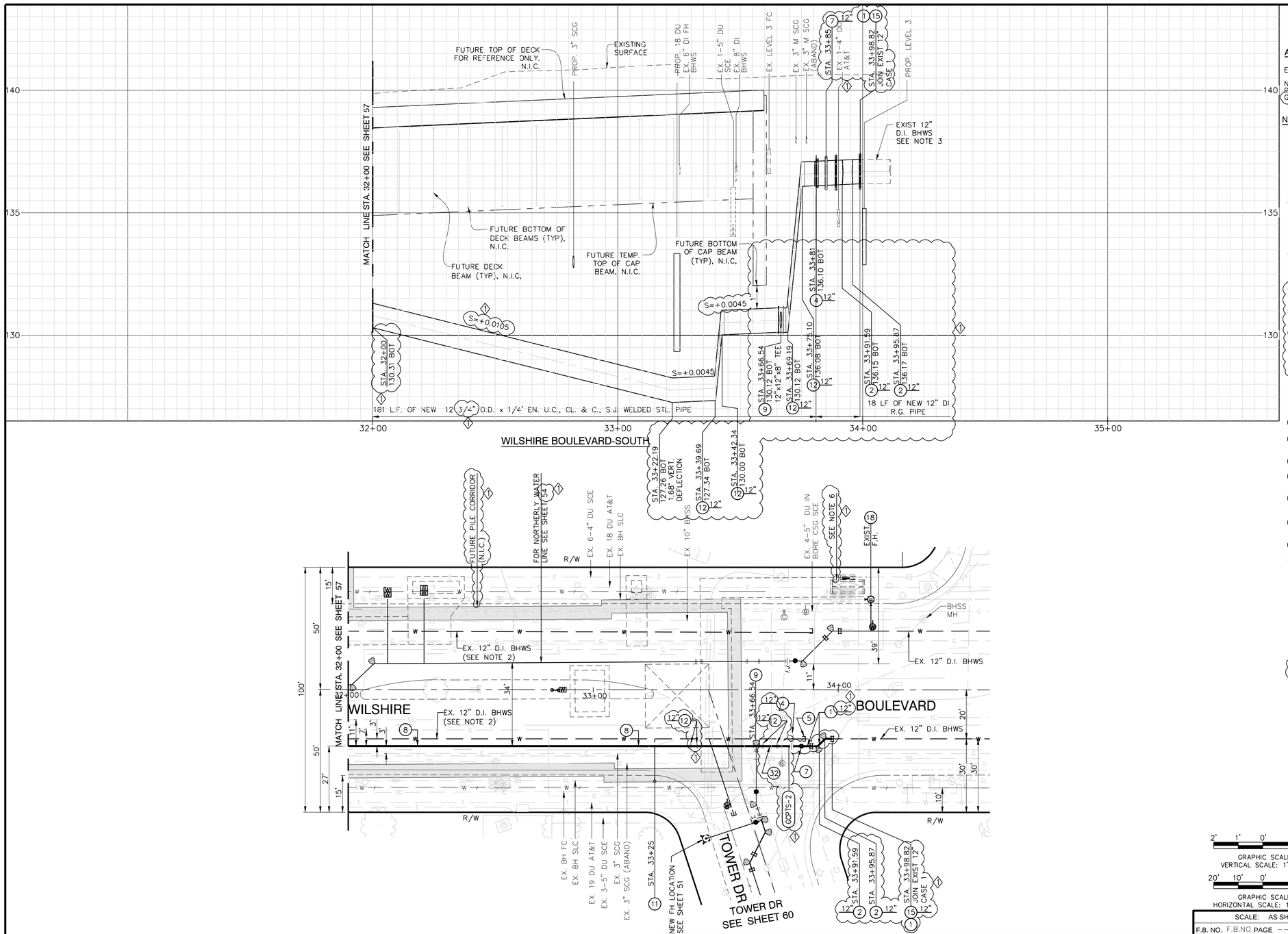

HORIZONTAL AND VERTICAL LOCATIONS TO BE VERIFIED IN THE FIELD AND ENGINEER NOTIFIED OF ANY DISCREPANCIES PRIOR TO CONSTRUCTION.

ABBREVIATIONS:

BH =CITY OF BEVERLY HILLS
EX. =EXISTING
J.C. =JUNCTION CHAMBER
N.I.C. =NOT IN CONTRACT
PROP. =PROPOSED
GCPTS =GALVANIZED CATHODIC PROTECTION TEST STATION (1)

NOTE:

1. TRENCHING SHALL BE PER CITY STANDARD BH 710, MODIFIED WITH CLSM PER S.S.P.W.C. 201-6 SAND SLURRY BACKFILL. ALSO SEE TYPICAL TRENCH SECTION DETAIL AND TYPICAL SUBSTRUCTURE CROSSING DETAIL ON SHEET 55 FOR PIPE CLEARANCE TO EXISTING WATERLINE. INSTALL 2" BLOW-OFF ASSEMBLY AS REQUIRED FOR PRESSURE TESTING.
2. EXISTING WATER IS TO BE PROTECTED IN PLACE DURING CONSTRUCTION OF NEW WATER PIPE AND TO BE ABANDONED IN PLACE AFTER NEW WATER HAS BEEN PUT INTO SERVICE. ABANDONED WATER IS TO BE REMOVED BY OTHERS PER SEPARATE FUTURE CONTRACT.
3. EXISTING WATER MAIN DEPTH IS APPROXIMATE. THE CONTRACTOR IS TO CONFIRM THE ACTUAL PIPE LOCATION, VERTICAL AND HORIZONTAL, PRIOR TO CONSTRUCTION.
4. TO BE CONSTRUCTED PER C1056 ADVANCED UTILITY RELOCATIONS CONTRACT PACKAGE.
5. C1056 CONTRACTOR TO VERIFY STATUS OF UTILITY RELOCATIONS WITH THE OWNER.
6. FUTURE APPENDAGES AND STATION ENTRANCES ARE SHOWN FOR REFERENCE ONLY AND N.I.C.
7. HORIZONTAL STATIONING OF PROPOSED WATER LINES IS ALONG THE CENTERLINE OF PIPE. (1)

CONSTRUCTION NOTES:

(1) INSTALL 8" OR 12" DUCTILE IRON PIPE CLASS 52. SEE NOTE 1

(2) INSTALL 8" OR 12" DUCTILE IRON PIPE 45° ANGLE FITTINGS (MJ X MJ) CLASS 52, WITH RESTRAINED JOINTS. INSTALL THRUST BLOCK.

(4) INSTALL 8" OR 12" PRE ASS'D INSULATING FLANGE TYPE I-E.

(5) CAP EXISTING LINE WITH CONCRETE MORTAR PER CITY STANDARD BH 708 AND ABANDON IN PLACE.

(7) INSTALL 12" BUTTERFLY VALVE (FLG X FLG), CLASS 150. INSTALL VALVE BOX ASSEMBLY PER CITY STANDARD PLAN BH 707.

(8) INSTALL 12-3/4" O.D. X ¼" EN. UC., C.L. & C., S.J. WELDED STEEL PIPE. SEE NOTE 1

(9) INSTALL 12" X 12" X 8" FLANGED STEEL TEE, WITH RESTRAINED JOINTS.

(11) REMOVE EXISTING F.H. ASSEMBLY, ON F.H. LATERAL, REMOVE F.H GATE VALVE, REMOVE AND DISPOSE OF EXISTING VALVE CAN AND COVER, CAP & PLUG EXISTING TEE.

(12) INSTALL 8" OR 12" X 45° WELD STEEL ELBOW AND CONCRETE THRUST BLOCK.

(15) REMOVE INTERFERING PORTION OF EXISTING 8" OR 12" WATER MAIN. INSTALL 8" OR 12" DUCTILE IRON SPOOL (MJ X MJ), CLASS 52 WITH RESTRAINED JOINTS AND CONNECT TO EXISTING 8" OR 12" DUCTILE IRON PIPE. SEE SHEETS 52 THRU 55, CASE AS APPLICABLE. EXACT POINT OF CONNECTION TO BE FIELD VERIFIED BY THE CONTRACTOR.

(18) PROTECT IN PLACE EXISTING FIRE HYDRANT, VALVE, ETC

(32) APPLY CATHODIC PROTECTION TO STEEL PIPE OUTSIDE OF EXCAVATION ZONE ONLY. SEE SHEET 65 FOR CATHODIC PROTECTION NOTES AND DETAILS. (1)

DATUMS:

THE BASIS OF HORIZONTAL CONTROL FOR THIS PROJECT IS THE CALIFORNIA COORDINATE SYSTEM NAD83 ZONE 5 (2007.0 EPOCH) DETERMINED LOCALLY BY THE FOLLOWING NGS POINTS: EW9587, EW9595 AND AA9327

ELEVATIONS ARE BASED ON THE NAVD 1988 – SPECIFICALLY CITY OF LOS ANGELES BENCHMARKS 12-16091, 13-13450 AND 13-13352 (2000 ADJ)

GRAPHIC SCALE VERTICAL SCALE: 1" = 2'
2' 1' 0' 2'

GRAPHIC SCALE HORIZONTAL SCALE: 1" = 20'
20' 10' 0' 20'

N

C1056 AUR CONTRACT DRAWING NO. UW-017

PROJECT:
BEVERLY HILLS
WESTSIDE SUBWAY EXTENSION
ADVANCED UTILITY RELOCATIONS
WILSHIRE / LA CIENEGA STATION
TEMPORARY WATER RELOCATION
PLAN AND PROFILE
STA 32+00

Metro
LOS ANGELES COUNTY METROPOLITAN TRANSPORTATION AUTHORITY
777 SOUTH FIGUEROA ST. 11TH FLOOR
LOS ANGELES, CA 90017

PARSONS BRINCKERHOFF
PREPARED UNDER THE SUPERVISION OF:
NAME: ZAFER MUDAR LIC. # C64154; EXPIRES 12/31/14 DATE

REGISTERED PROFESSIONAL ENGINEER ZAFER MUDAR No. C64154 EXPIRES: 12/31/2014 CIVIL STATE OF CALIFORNIA

SCALE: AS SHOWN			
F.B. NO. F.B.NO. PAGE -- TO --			
DESIGNED C. MALDONADO DATE 02/07/14			
DRAWN T. CABRERA DATE 02/07/14			
CHECKED Z. MUDAR DATE 02/07/14			
4/3/14	AMENDMENT 3	ZM	1
2/21/14	ISSUED FOR SOLICITATION	ZM	0
DATE	DESCRIPTION	BY	REV

SUBMITTED _____ DATE _____

APPROVED _____ DATE _____
CITY ENGINEER

JOB NO. 1335 DRAWING NO. 7443
SHEET 58 OF 172 SHEET

CITY OF BEVERLY HILLS, CALIFORNIA
CIVIL ENGINEERING DEPARTMENT

DWG Filename: L:\LA\PSBW\WA-CBM\CADD\Y2_UTILITIES\01\06\BH\BHWATER\PLANS & PROFILES\C1056UW01.DWG Plot Date & Time: 4/1/2014 2:51:53 PM Plotted by: Nadon,Roque

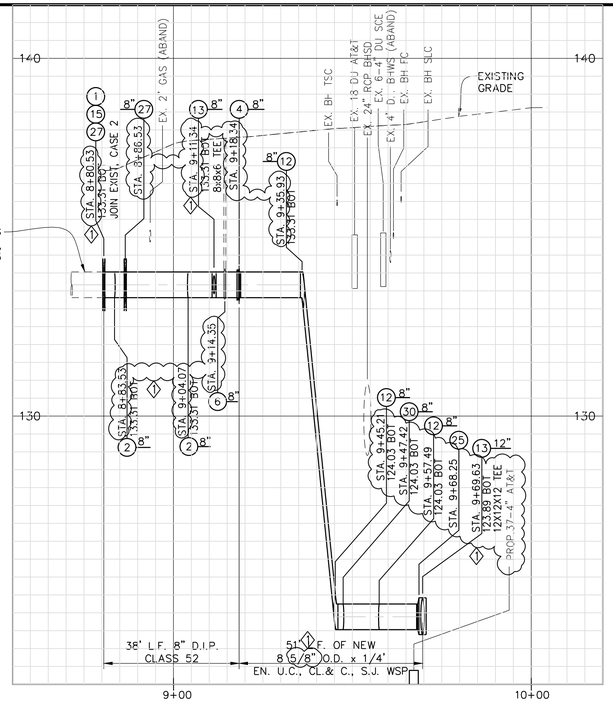

LA CIENEGA BLVD SOUTH
8" WATER PIPE

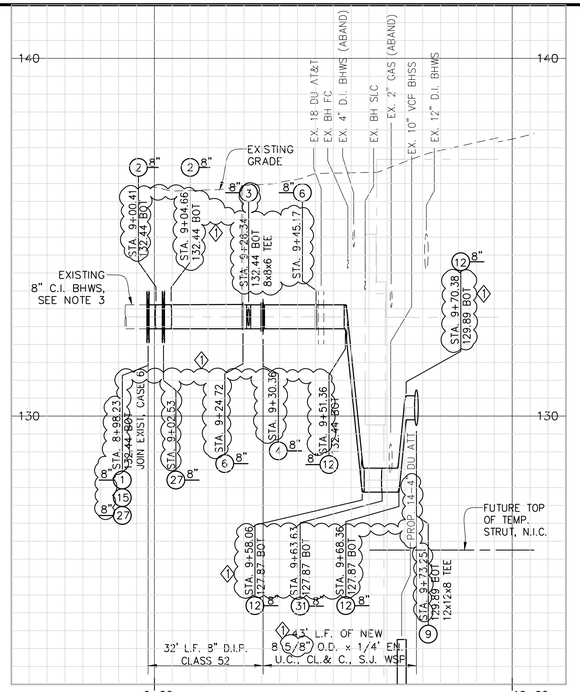

HAMILTON DRIVE SOUTH
8" WATER PIPE

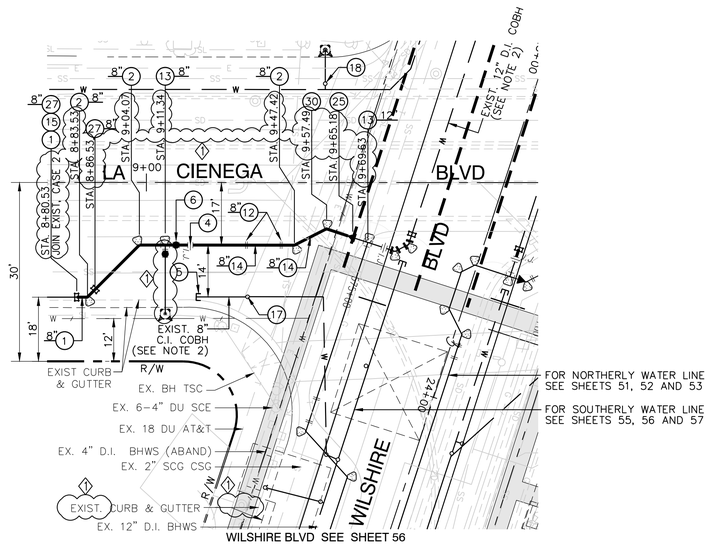

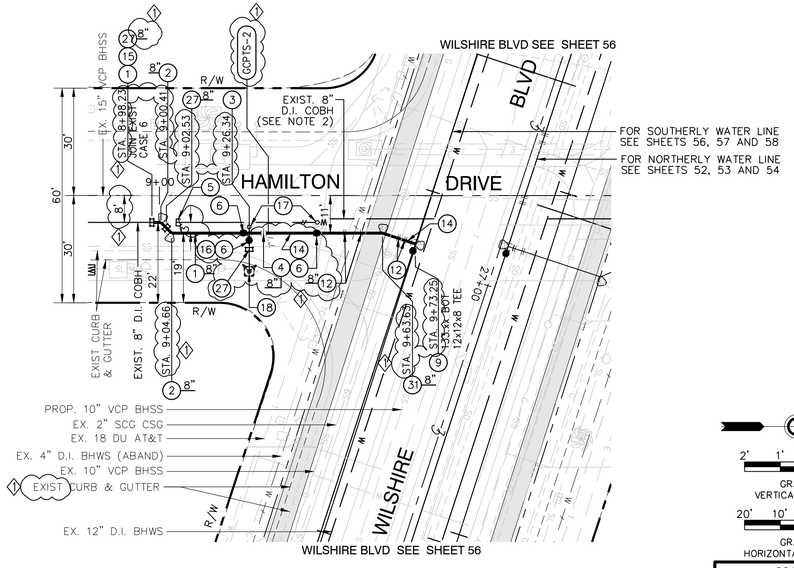

HORIZONTAL AND VERTICAL LOCATIONS TO BE VERIFIED IN THE FIELD AND ENGINEER NOTIFIED OF ANY DISCREPANCIES PRIOR TO CONSTRUCTION.

ABBREVIATIONS:

BH =CITY OF BEVERLY HILLS
EX. =EXISTING
J.C. =JUNCTION CHAMBER
N.I.C. =NOT IN CONTRACT
PROP =PROPOSED
CCPTS =CALVANIC CATHODIC PROTECTION TEST STATION

NOTE:

1. TRENCHING SHALL BE PER CITY STANDARD BH 710, MODIFIED WITH CLSM PER S.S.P.W.C. 201-6 SAND SLURRY BACKFILL. ALSO SEE TYPICAL TRENCH SECTION DETAIL AND TYPICAL SUBSTRUCTURE CROSSING DETAIL ON SHEET 55 FOR PIPE CLEARANCE TO EXISTING WATERLINE. INSTALL 2" BLOW-OFF ASSEMBLY AS REQUIRED FOR PRESSURE TESTING.
2. EXISTING WATER IS TO BE PROTECTED IN PLACE DURING CONSTRUCTION OF NEW WATER PIPE AND TO BE ABANDONED IN PLACE AFTER NEW WATER HAS BEEN PUT INTO SERVICE. ABANDONED WATER IS TO BE REMOVED BY OTHERS PER SEPARATE FUTURE CONTRACT.
3. EXISTING WATER MAIN DEPTH IS APPROXIMATE. THE CONTRACTOR IS TO CONFIRM THE ACTUAL PIPE LOCATION, VERTICAL AND HORIZONTAL, PRIOR TO CONSTRUCTION.
4. TO BE CONSTRUCTED PER C1056 ADVANCED UTILITY RELOCATIONS CONTRACT PACKAGE.
5. C1056 CONTRACTOR TO VERIFY STATUS OF UTILITY RELOCATIONS WITH THE OWNER.
6. FUTURE APPENDAGES AND STATION ENTRANCES ARE SHOWN FOR REFERENCE ONLY AND N.I.C.
7. HORIZONTAL STATIONING OF PROPOSED WATER LINES IS ALONG THE CENTERLINE OF PIPE.

CONSTRUCTION NOTES:

1. INSTALL 8" OR 12" DUCTILE IRON PIPE CLASS 52. SEE NOTE 1
2. INSTALL 8" OR 12" DUCTILE IRON PIPE 45° ANGLE FITTINGS (MJ X MJ) CLASS 52, WITH RESTRAINED JOINTS. INSTALL THRUST BLOCK.
3. INSTALL 8"X8"X6" DUCTILE IRON PIPE TEE (MJ X FLG) FITTING CLASS 52, WITH RESTRAINED JOINTS PER CITY STANDARD BH 705 FOR FIRE HYDRANTS.
4. INSTALL 8" OR 12" PRE ASS'D INSULATING FLANGE TYPE I-E.
5. CAP EXISTING LINE WITH CONCRETE MORTAR PER CITY STANDARD BH 708 AND ABANDON IN PLACE.
6. INSTALL 8" BUTTERFLY VALVE (FLG X FLG), CLASS 150. INSTALL VALVE BOX ASSEMBLY PER CITY STANDARD PLAN BH 707.
9. INSTALL 12" X 12" X 8" FLANGED STEEL TEE, WITH RESTRAINED JOINTS.
10. INSTALLATION OF FIRE HYDRANT PER CITY STANDARD BH 703 & BH 705.
11. REMOVE EXISTING F.H. ASSEMBLY, ON F.H. LATERAL, REMOVE F.H GATE VALVE, REMOVE AND DISPOSE OF EXISTING VALVE CAN AND COVER, CAP & PLUG EXISTING TEE.
12. INSTALL 8" OR 12" X 45° WELDED STEEL ELBOW AND CONCRETE THRUST BLOCK.
13. INSTALL 8" X 8" X 6" OR 12" X 12" X 12" FLANGED STEEL TEE, WITH RESTRAINED JOINTS.
14. INSTALL 8-5/8" O.D. X 1/4" EN. U.C., C.L. & C., S.J. WELDED STEEL PIPE. SEE NOTE 1.
15. REMOVE INTERFERING PORTION OF EXISTING 8" OR 12" WATER MAIN. INSTALL 8" OR 12" DUCTILE IRON SPOOL (MJ X MJ), CLASS 52 WITH RESTRAINED JOINTS AND CONNECT TO EXISTING 8" OR 12" DUCTILE IRON PIPE. SEE SHEETS 52 THRU 55, CASE AS APPLICABLE. EXACT POINT OF CONNECTION TO BE FIELD VERIFIED BY THE CONTRACTOR.
17. REMOVE AND DISPOSE OF EXISTING VALVE CAN COVER.
18. PROTECT IN PLACE EXISTING FIRE HYDRANT, VALVE, ETC.
25. INSTALL 12" X 8" REDUCER
27. INSTALL 6", 8" OR 12" COMPRESSION COUPLING.
30. INSTALL 8" X 26.9° WELDED STEEL ELBOW
31. INSTALL 8" X 18.2° WELDED STEEL ELBOW
32. APPLY CATHODIC PROTECTION TO STEEL PIPE OUTSIDE OF EXCAVATION ZONE ONLY SEE SHEET 65 FOR CATHODIC PROTECTION NOTES AND DETAILS.

DATUMS:

THE BASIS OF HORIZONTAL CONTROL FOR THIS PROJECT IS THE CALIFORNIA COORDINATE SYSTEM NAD83 ZONE 5 (2007.0 EPOCH) DETERMINED LOCALLY BY THE FOLLOWING NGS POINTS: EW9587, EW9595 AND AA9327

ELEVATIONS ARE BASED ON THE NAVD 1988 – SPECIFICALLY CITY OF LOS ANGELES BENCHMARKS 12-16091, 13-13450 AND 13-13352 (2000 ADJ)

GRAPHIC SCALE VERTICAL SCALE: 1" = 2'
2' 1' 0' 2'

GRAPHIC SCALE HORIZONTAL SCALE: 1" = 20'
20' 10' 0' 20'

C1056 AUR CONTRACT DRAWING NO. UW-018

PROJECT:
BEVERLY HILLS
WESTSIDE SUBWAY EXTENSION
ADVANCED UTILITY RELOCATIONS
WILSHIRE / LA CIENEGA STATION
TEMPORARY WATER RELOCATION
PLAN AND PROFILE
STA 9+00 TO STA 10+00

SCALE: AS SHOWN			
F.B. NO. F.B.NO.PAGE -- TO --			
DESIGNED C. MALDONADO	DATE 02/07/14		
DRAWN T. CABRERA	DATE 02/07/14		
CHECKED Z. MUDAR	DATE 02/07/14		
4/3/14	AMENDMENT 3	ZM	1
2/21/14	ISSUED FOR SOLICITATION	ZM	0
DATE	DESCRIPTION	BY	REV

SUBMITTED _____ DATE _____
APPROVED _____ DATE _____
CITY ENGINEER

JOB NO. 1335
DRAWING NO. 7443
SHEET 59 OF 172 SHEET

CITY OF BEVERLY HILLS, CALIFORNIA
CIVIL ENGINEERING DEPARTMENT

Metro
LOS ANGELES COUNTY METROPOLITAN TRANSPORTATION AUTHORITY
777 SOUTH FIGUEROA ST. 11TH FLOOR
LOS ANGELES, CA 90017

PARSONS BRINCKERHOFF
PREPARED UNDER THE SUPERVISION OF:
NAME: ZAFER MUDAR LIC. # C64154; EXPIRES 12/31/14 DATE

REGISTERED PROFESSIONAL ENGINEER ZAFER MUDAR No. C64154 EXPIRES: 12/31/2014 CIVIL STATE OF CALIFORNIA

Plotted by: Nacion,Roque
Plot Date & Time: 4/1/2014 2:52:02 PM
L:\LAEWBM\WA-BM\CADD\V2_UTILITIES\UTILITIES\UTILITIES\PLANS & PROFILES\C1056UW018.DWG

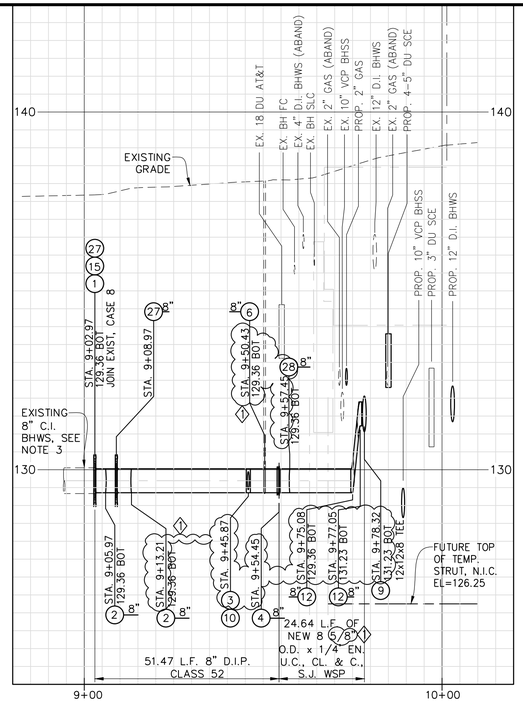

GALE DRIVE SOUTH
8" WATER PIPE

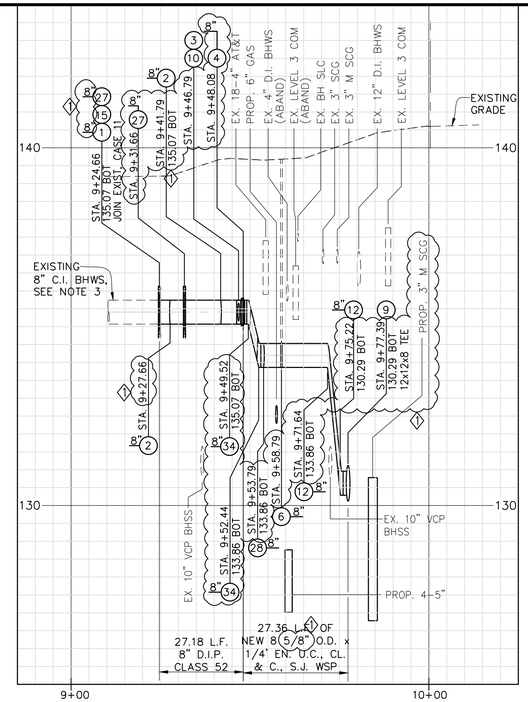

TOWER DRIVE SOUTH
8" WATER PIPE

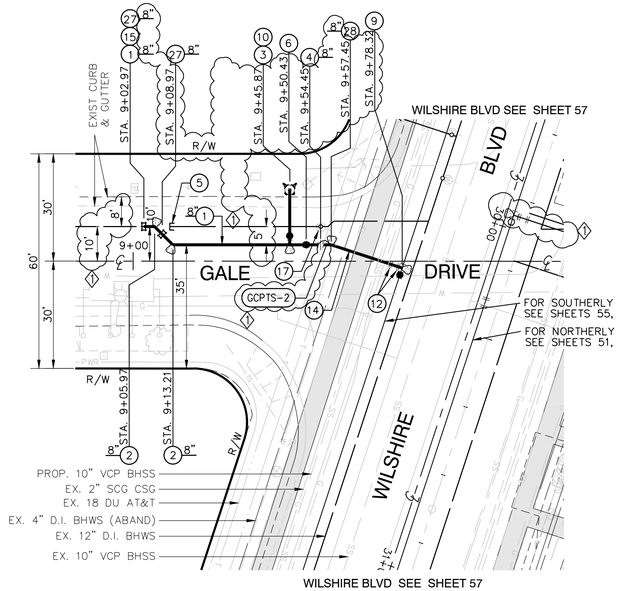

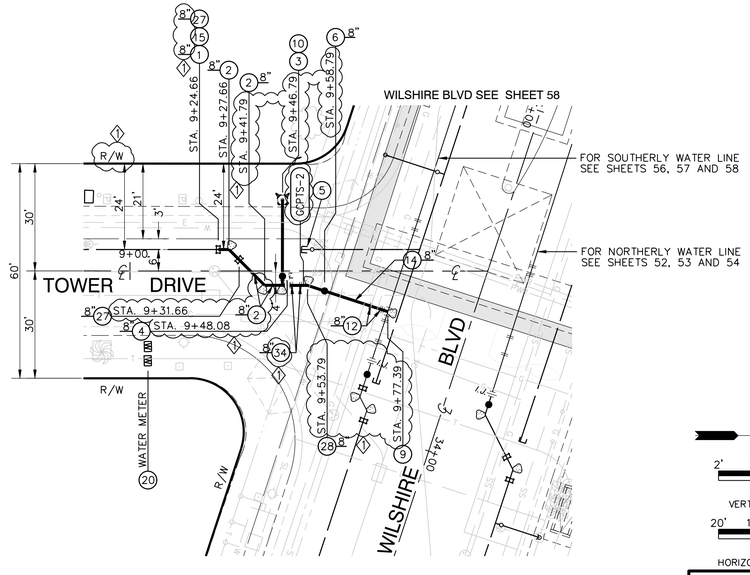

HORIZONTAL AND VERTICAL LOCATIONS TO BE VERIFIED IN THE FIELD AND ENGINEER NOTIFIED OF ANY DISCREPANCIES PRIOR TO CONSTRUCTION.

ABBREVIATIONS:

BH =CITY OF BEVERLY HILLS
EX. =EXISTING
J.C. =JUNCTION CHAMBER
N.I.C. =NOT IN CONTRACT
PROP. =PROPOSED
GCPTS =GALVANIC CATHODIC PROTECTION TEST STATION (1)

NOTE:

1. TRENCHING SHALL BE PER CITY STANDARD BH 710, MODIFIED WITH CLSM PER S.S.P.W.C. 201-6 SAND SLURRY BACKFILL. ALSO SEE TYPICAL TRENCH SECTION DETAIL AND TYPICAL SUBSTRUCTURE CROSSING DETAIL ON SHEET 55 FOR PIPE CLEARANCE TO EXISTING WATERLINE. INSTALL 2" BLOW-OFF ASSEMBLY AS REQUIRED FOR PRESSURE TESTING.
2. EXISTING WATER IS TO BE PROTECTED IN PLACE DURING CONSTRUCTION OF NEW WATER PIPE AND TO BE ABANDONED IN PLACE AFTER NEW WATER HAS BEEN PUT INTO SERVICE. ABANDONED WATER IS TO BE REMOVED BY OTHERS PER SEPARATE FUTURE CONTRACT.
3. EXISTING WATER MAIN DEPTH IS APPROXIMATE. THE CONTRACTOR IS TO CONFIRM THE ACTUAL PIPE LOCATION, VERTICAL AND HORIZONTAL, PRIOR TO CONSTRUCTION.
4. TO BE CONSTRUCTED PER C1056 ADVANCED UTILITY RELOCATIONS CONTRACT PACKAGE.
5. C1056 CONTRACTOR TO VERIFY STATUS OF UTILITY RELOCATIONS WITH THE OWNER.
6. FUTURE APPENDAGES AND STATION ENTRANCES ARE SHOWN FOR REFERENCE ONLY AND N.I.C.
7. HORIZONTAL STATIONING OF PROPOSED WATER LINES IS ALONG THE CENTERLINE OF PIPE. (1)

CONSTRUCTION NOTES:

(1) INSTALL 8" OR 12" DUCTILE IRON PIPE CLASS 52. SEE NOTE 1

(2) INSTALL 8" OR 12" DUCTILE IRON PIPE 45° ANGLE FITTINGS (MJ X MJ) CLASS 52, WITH RESTRAINED JOINTS. INSTALL THRUST BLOCK.

(3) INSTALL 8"X8"X6" DUCTILE IRON PIPE TEE (MJ X FLG) FITTING CLASS 52, WITH RESTRAINED JOINTS PER CITY STANDARD BH 705 FOR FIRE HYDRANTS.

(4) INSTALL 8" OR 12" PRE ASS'D INSULATING FLANGE TYPE I-E.

(5) CAP EXISTING LINE WITH CONCRETE MORTAR PER CITY STANDARD BH 708 AND ABANDON IN PLACE.

(6) INSTALL 8" BUTTERFLY VALVE (FLG X FLG), CLASS 150. INSTALL VALVE BOX ASSEMBLY PER CITY STANDARD PLAN BH 707.

(9) INSTALL 12" X 12" X 8" FLANGED STEEL TEE, WITH RESTRAINED JOINTS.

(10) INSTALLATION OF FIRE HYDRANT PER CITY STANDARD BH 703 & BH 705

(12) INSTALL 8" OR 12" X 45° WELD STEEL ELBOW AND CONCRETE THRUST BLOCK.

(14) INSTALL 8-5/8" O.D. X 1/4" EN. U.C., C.L. & C., S.J. WELDED STEEL PIPE. SEE NOTE 1.

(15) REMOVE INTERFERING PORTION OF EXISTING 8" OR 12" WATER MAIN. INSTALL 8" OR 12" DUCTILE IRON SPOOL (MJ X MJ), CLASS 52 WITH RESTRAINED JOINTS AND CONNECT TO EXISTING 8" OR 12" DUCTILE IRON PIPE. SEE SHEETS 52 THRU 55, CASE AS APPLICABLE. EXACT POINT OF CONNECTION TO BE FIELD VERIFIED BY THE CONTRACTOR.

(17) REMOVE AND DISPOSE OF EXISTING VALVE CAN COVER.

(20) EXISTING SERVICES SHALL BE REALIGNED AND RECONNECTED TO THEIR RESPECTIVE METER BOXES. MAINTAIN A MINIMUM 18" SEPARATION BETWEEN SERVICES.

(27) INSTALL 6", 8" OR 12" COMPRESSION COUPLING.

(28) INSTALL 8" X 18.1° WELDED STEEL ELBOW

(32) APPLY CATHODIC PROTECTION TO STEEL PIPE OUTSIDE OF EXCAVATION ZONE ONLY. SEE SHEET 65 FOR CATHODIC PROTECTION NOTES AND DETAILS.

(34) INSTALL 8" X 22.5° WELDED STEEL ELBOW (1)

DATUMS:

THE BASIS OF HORIZONTAL CONTROL FOR THIS PROJECT IS THE CALIFORNIA COORDINATE SYSTEM NAD83 ZONE 5 (2007.0 EPOCH) DETERMINED LOCALLY BY THE FOLLOWING NGS POINTS: EW9587, EW9595 AND AA9327

ELEVATIONS ARE BASED ON THE NAVD 1988 – SPECIFICALLY CITY OF LOS ANGELES BENCHMARKS 12-16091, 13-13450 AND 13-13352 (2000 ADJ)

N

GRAPHIC SCALE
VERTICAL SCALE: 1" = 2'
2' 1' 0' 2'

GRAPHIC SCALE
HORIZONTAL SCALE: 1" = 20'
20' 10' 0' 20'

C1056 AUR CONTRACT DRAWING NO. UW-019

PROJECT:
BEVERLY HILLS
WESTSIDE SUBWAY EXTENSION ADVANCED UTILITY RELOCATIONS
WILSHIRE / LA CIENEGA STATION
TEMPORARY WATER RELOCATION
PLAN AND PROFILE
STA 9+00 TO STA 10+00

Metro
LOS ANGELES COUNTY METROPOLITAN TRANSPORTATION AUTHORITY
777 SOUTH FIGUEROA ST. 11TH FLOOR
LOS ANGELES, CA 90017

PARSONS BRINCKERHOFF
PREPARED UNDER THE SUPERVISION OF:
NAME: ZAFER MUDAR LIC. # C64154; EXPIRES 12/31/14 DATE

REGISTERED PROFESSIONAL ENGINEER
ZAFER MUDAR
No. C64154
EXPIRES: 12/31/2014
CIVIL
STATE OF CALIFORNIA

SCALE:	AS SHOWN
F.B. NO.	F.B.NO.PAGE -- TO --
DESIGNED	C. MALDONADO DATE 02/07/14
DRAWN	T. CABRERA DATE 02/07/14
CHECKED	Z. MUDAR DATE 02/07/14

DATE	DESCRIPTION	BY	REV
4/3/14	AMENDMENT 3	ZM	1
2/21/14	ISSUED FOR SOLICITATION	ZM	0

SUBMITTED _____ DATE _____
APPROVED _____ DATE _____
CITY ENGINEER

JOB NO. 1335
DRAWING NO. 7443
SHEET 60 OF 172 SHEET

CITY OF BEVERLY HILLS, CALIFORNIA
CIVIL ENGINEERING DEPARTMENT

WO Filename: L:\LAWSBW\WA\BSW\CADD\Y2_DTL\TIES\CNTR\PB\WHA\LIER\PLANS & PROFILES\C1056UW019.DWG Plot Date & Time: 4/1/2014 2:52:11 PM Plotted by: Nadon,Roque

HORIZONTAL AND VERTICAL LOCATIONS TO BE VERIFIED IN THE FIELD AND ENGINEER NOTIFIED OF ANY DISCREPANCIES PRIOR TO CONSTRUCTION.

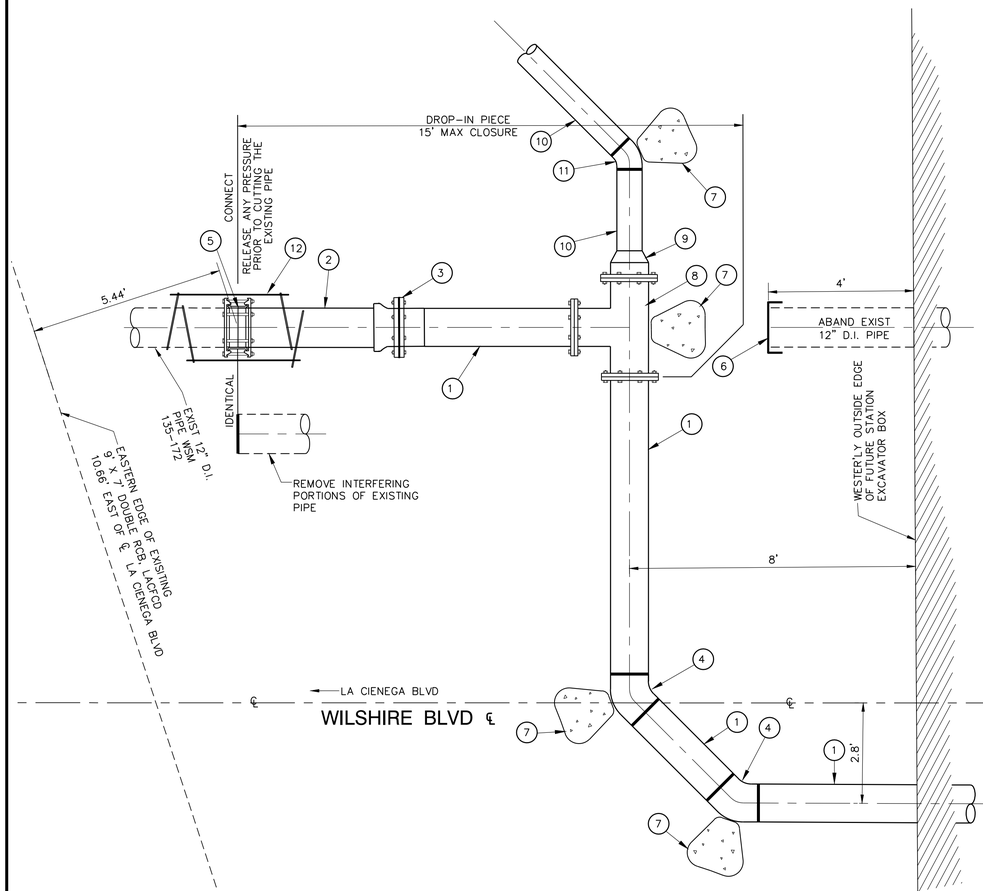

(1) – 12" WELDED STEEL PIPE
(2) – 12" D.I.R.G. PIPE
(3) – 12" PRE-ASS'D INS JOINT TYPE I-E
(4) – 12" X 45° WELD STEEL ELBOW
(5) – 12" COMPRESSION COUPLING *
(6) – CAP OR PLUG
(7) – CONCRETE THRUST BLOCK
(8) – 12" TEE (MJ x FLG)
(9) – 12" x 8" BELL REDUCER (FLG x S)
(10) – 8" WELDED STEEL PIPE
(11) – 8" x 45° WELDED STEEL ELBOW
(12) – 12" SAFETY YOKE W/RODS

* EX: MJ WITH CAM-LOCK RESTRAINED JOINTS, SMITH & BLAIR III OR APPROVED EQUAL.

WILSHIRE BLVD W/B AT LA CIENEGA BLVD -N'RLY CONNECTION 1

SCALE: 1/2" = 1'

SHEET 52

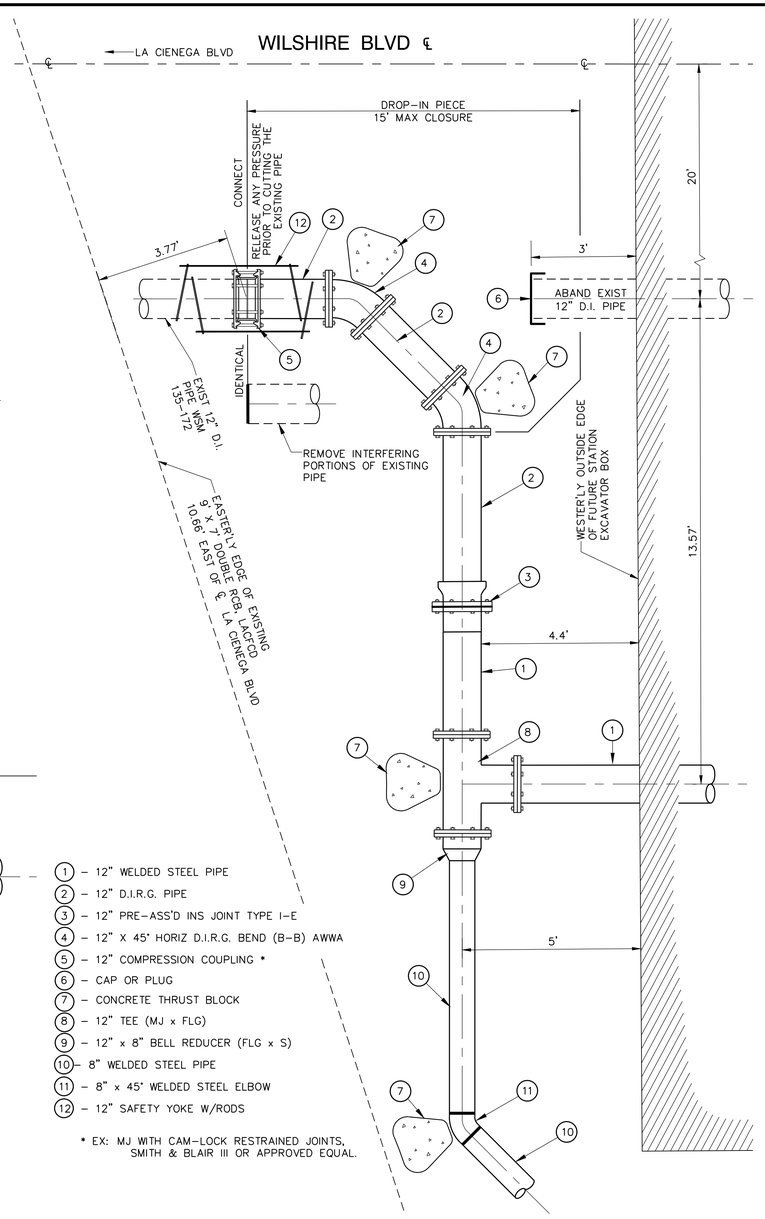

(1) – 12" WELDED STEEL PIPE
(2) – 12" D.I.R.G. PIPE
(3) – 12" PRE-ASS'D INS JOINT TYPE I-E
(4) – 12" X 45° HORIZ D.I.R.G. BEND (B-B) AWWA
(5) – 12" COMPRESSION COUPLING *
(6) – CAP OR PLUG
(7) – CONCRETE THRUST BLOCK
(8) – 12" TEE (MJ x FLG)
(9) – 12" x 8" BELL REDUCER (FLG x S)
(10) – 8" WELDED STEEL PIPE
(11) – 8" x 45° WELDED STEEL ELBOW
(12) – 12" SAFETY YOKE W/RODS

* EX: MJ WITH CAM-LOCK RESTRAINED JOINTS, SMITH & BLAIR III OR APPROVED EQUAL.

WILSHIRE BLVD W/B AT LA CIENEGA BLVD -SOUTH CONNECTION 2

SCALE: 1/2" = 1'

SHEET 56

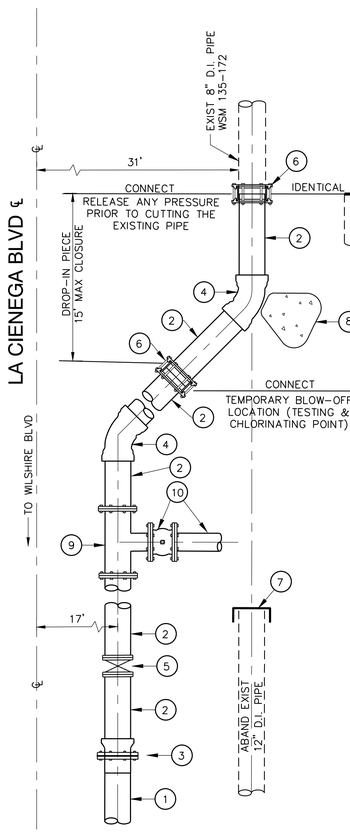

(1) – 8' WELDED STEEL PIPE
(2) – 8" D.I.R.G. PIPE
(3) – 8" PRE-ASS'D INS JOINT TYPE I-E
(4) – 8" X 45° HORIZ D.I.R.G. BEND (B-B) AWWA
(5) – 8" BUTTERFLY VALVE (FLG X FLG)
(6) – 8" COMPRESSION COUPLING *
(7) – CAP OR PLUG
(8) – CONCRETE THRUST BLOCK
(9) – 8" x 8" x 6" D.I.R.G. TEE
(10) – FIRE HYDRANT LATERAL, GATE VALVE, AND ASSEMBLY.

* EX: MJ WITH CAM-LOCK RESTRAINED JOINTS, SMITH & BLAIR III OR APPROVED EQUAL.

CONNECTION DETAIL LA CIENEGA BLVD - NORTH 3

SCALE: 1/2" = 1'

SHEET 55

C1056 AUR CONTRACT DRAWING NO. UW-020

PROJECT:
BEVERLY HILLS
WESTSIDE SUBWAY EXTENSION
ADVANCED UTILITY RELOCATIONS
WILSHIRE / LA CIENEGA STATION
TEMPORARY WATER RELOCATION
CONNECTION DETAILS

Metro
LOS ANGELES COUNTY
METROPOLITAN TRANSPORTATION AUTHORITY
777 SOUTH FIGUEROA ST. 11TH FLOOR
LOS ANGELES, CA 90017

PARSONS BRINCKERHOFF
PREPARED UNDER THE SUPERVISION OF:
NAME: ZAFER MUDAR LIC. # C64154; EXPIRES 12/31/14 DATE

REGISTERED PROFESSIONAL ENGINEER
ZAFER MUDAR
No. C64154
EXPIRES: 12/31/2014
CIVIL
STATE OF CALIFORNIA

SCALE: AS SHOWN			
F.B. NO. F.B.NO. PAGE -- TO --			
DESIGNED C. MALDONADO DATE 02/07/14			
DRAWN T. CABRERA DATE 02/07/14			
CHECKED Z. MUDAR DATE 02/07/14			
4/3/14	AMENDMENT 3	ZM	1
2/21/14	ISSUED FOR SOLICITATION	ZM	0
DATE	DESCRIPTION	BY	REV

SUBMITTED _____ DATE _____
APPROVED _____ DATE _____
CITY ENGINEER

JOB NO. 1335
DRAWING NO. 7443
SHEET 61 OF 172 SHEET

CITY OF BEVERLY HILLS, CALIFORNIA
CIVIL ENGINEERING DEPARTMENT

Printed by: Narciso Roque
Plot Date & Time: 4/7/2014 2:52:17 PM
IMG Filename: L:\LA\WSBM\WA\CAD\LY2_UTILITIES\C1056UW020.DWG

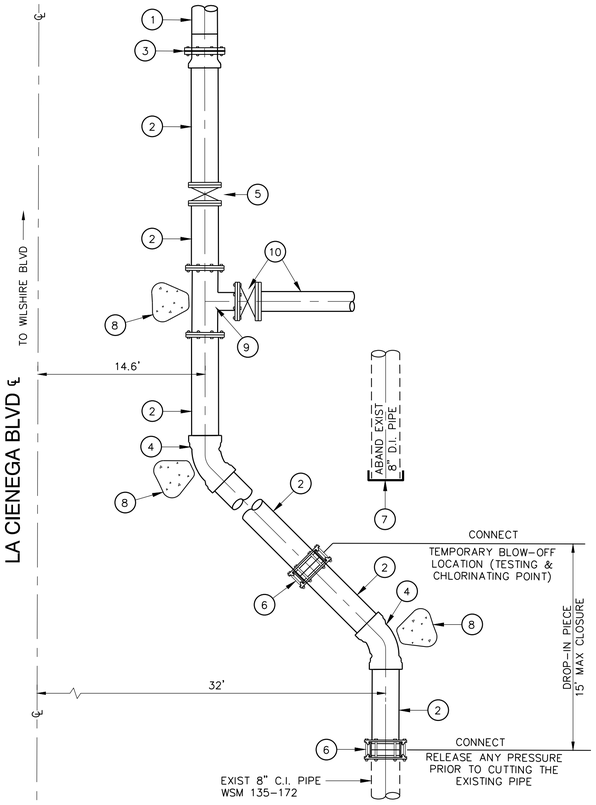

1 – 8" WELDED STEEL PIPE
2 – 8" D.I.R.G. PIPE
3 – 8" PRE-ASS'D INS JOINT TYPE I-E
4 – 8" X 45° HORIZ D.I.R.G. BEND (B-B) AWWA
5 – 8" BUTTERFLY VALVE (FLG X FLG)
6 – 8" COMPRESSION COUPLING *
7 – CAP OR PLUG
8 – CONCRETE THRUST BLOCK
9 – 8" x 8" X 6" (FLG) TEE
10 – FIRE HYDRANT LATERAL, GATE VALVE, AND ASSEMBLY.

* EX: MJ WITH CAM-LOCK RESTRAINED JOINTS, SMITH & BLAIR III OR APPROVED EQUAL.

CONNECTION DETAIL LA CIENEGA BLVD - SOUTH 4

SCALE: 1/2" = 1' CASE 4 SHEET 59

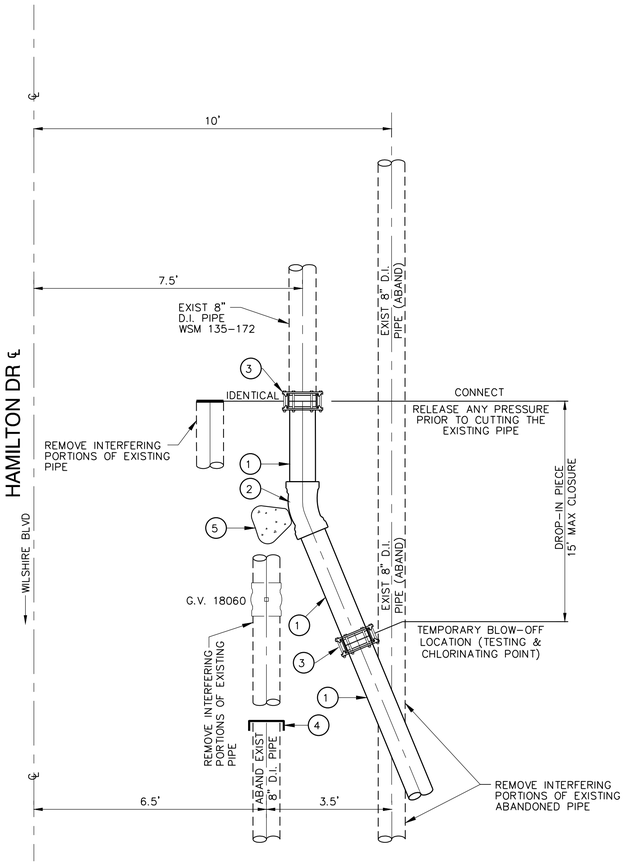

1 – 8" D.I.R.G. PIPE
2 – 8" X 22.5° HORIZ D.I.R.G. BEND (B-B) AWWA
3 – 8" COMPRESSION COUPLING *
4 – CAP OR PLUG
5 – CONCRETE THRUST BLOCK

* EX: MJ WITH CAM-LOCK RESTRAINED JOINTS, SMITH & BLAIR III OR APPROVED EQUAL.

CONNECTION DETAIL HAMILTON DR - NORTH 5

SCALE: 1/2" = 1' CASE 5 SHEET 55

HORIZONTAL AND VERTICAL LOCATIONS TO BE VERIFIED IN THE FIELD AND ENGINEER NOTIFIED OF ANY DISCREPANCIES PRIOR TO CONSTRUCTION.

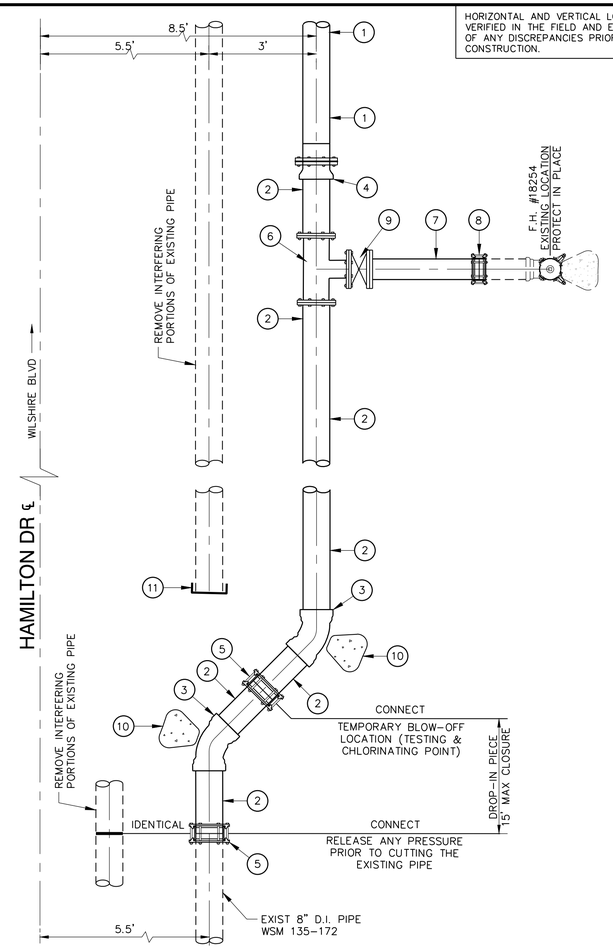

1 – 8" WELDED STEEL PIPE
2 – 8" D.I. R.G. PIPE
3 – 8" X 45° D.I. R.G. BEND
4 – 8" PRE-ASS'D INS. JOINT TYPE I-E
5 – 8" COMPRESSION COUPLING *
6 – 8" X 6" (FLG) TEE
7 – 6" D.I. R.G. PIPE
8 – 6" COMPRESSION COUPLING
9 – 6" GATE VALVE
10 – CONCRETE THRUST BLOCK
11 – CAP OR PLUG

* EX: MJ WITH CAM-LOCK RESTRAINED JOINTS, SMITH & BLAIR III OR APPROVED EQUAL.

CONNECTION DETAIL HAMILTON DR - SOUTH 6

SCALE: 1/2" = 1' CASE 6 SHEET 59

LEGEND: X = CASE NUMBER; SHEET XX = SHEET NUMBER

C1056 AUR CONTRACT DRAWING NO. UW-021

PROJECT: BEVERLY HILLS
WESTSIDE SUBWAY EXTENSION
ADVANCED UTILITY RELOCATIONS
WILSHIRE / LA CIENEGA STATION
TEMPORARY WATER RELOCATION
CONNECTION DETAILS

Metro
LOS ANGELES COUNTY METROPOLITAN TRANSPORTATION AUTHORITY
777 SOUTH FIGUEROA ST. 11TH FLOOR
LOS ANGELES, CA 90017

PARSONS BRINCKERHOFF
PREPARED UNDER THE SUPERVISION OF:
NAME: ZAFER MUDAR LIC. # C64154; EXPIRES 12/31/14 DATE

REGISTERED PROFESSIONAL ENGINEER ZAFER MUDAR No. C64154 EXPIRES: 12/31/2014 CIVIL STATE OF CALIFORNIA

SCALE:	AS SHOWN
F.B. NO.	F.B.NO.PAGE -- TO --
DESIGNED	C. MALDONADO DATE 02/07/14
DRAWN	T. CABRERA DATE 02/07/14
CHECKED	Z. MUDAR DATE 02/07/14

DATE	DESCRIPTION	BY	REV
4/3/14	AMENDMENT 3	ZM	1
2/21/14	ISSUED FOR SOLICITATION	ZM	0

SUBMITTED _____ DATE _____
APPROVED _____ DATE _____
CITY ENGINEER

JOB NO. 1335 DRAWING NO. 7443
SHEET 62 OF 172 SHEET

CITY OF BEVERLY HILLS, CALIFORNIA
CIVIL ENGINEERING DEPARTMENT

Plot Date & Time: 4/7/2014 2:52:22 PM
Printed by: Nacion,Roque
W:\C1056AUR\WILSHIRA\CADD\Y12_UTILITIES\UTILITIES\WATER\DETAILS\UW021.DWG

HORIZONTAL AND VERTICAL LOCATIONS TO BE VERIFIED IN THE FIELD AND ENGINEER NOTIFIED OF ANY DISCREPANCIES PRIOR TO CONSTRUCTION.

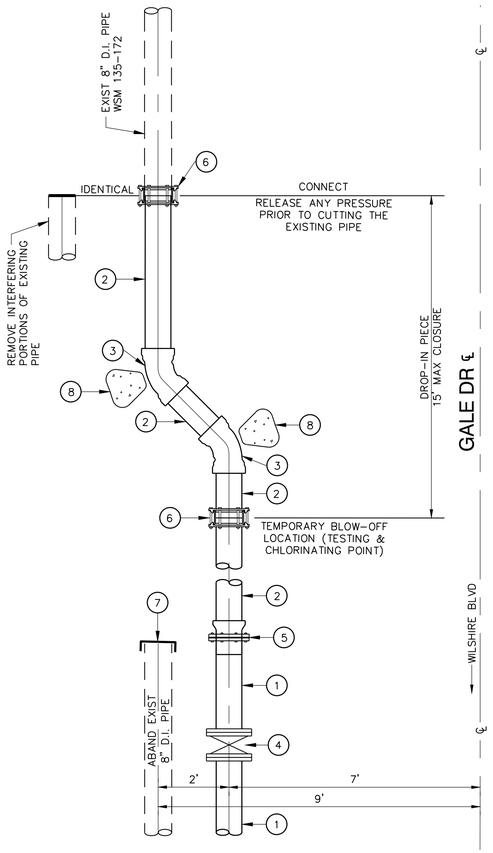

1. – 8" WELDED STEEL PIPE
2. – 8" D.I. R.G. PIPE
3. – 8" X 45° HORIZ D.I.R.G. BEND (B–B) AWWA
4. – 8" BUTTERFLY VALVE (FLG X FLG)
5. – 8" PRE ASS'D INS. JOINT TYPE I–E
6. – 8" COMPRESSION COUPLING *
7. – CAP OR PLUG
8. – CONCRETE THRUST BLOCK

* EX: MJ WITH CAM–LOCK RESTRAINED JOINTS, SMITH & BLAIR III OR APPROVED EQUAL.

N

CONNECTION DETAIL GALE DR - NORTH 7

SCALE: 1/2" = 1' CASE 7 SHEET 55

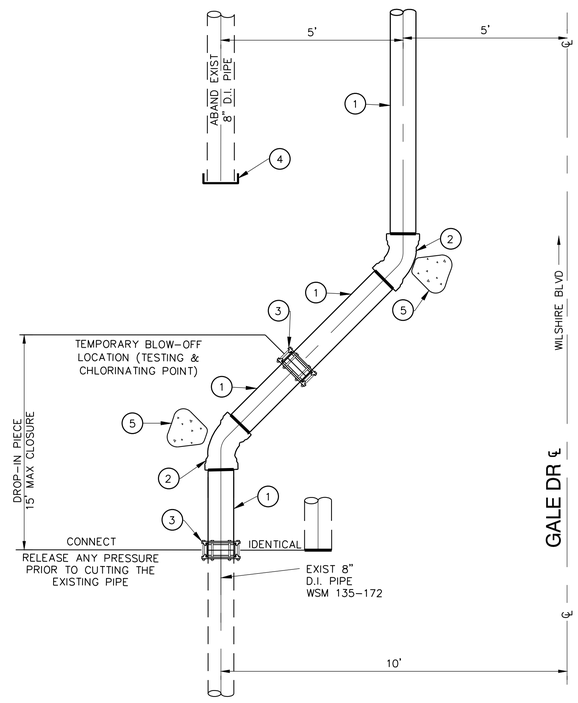

1. – 8" D.I.R.G. PIPE
2. – 8" X 45° HORIZ D.I.R.G. BEND (B–B) AWWA
3. – 8" COMPRESSION COUPLING *
4. – CAP OR PLUG
5. – CONCRETE THRUST BLOCK

* EX: MJ WITH CAM–LOCK RESTRAINED JOINTS, SMITH & BLAIR III OR APPROVED EQUAL.

N

CONNECTION DETAIL GALE DR - SOUTH 8

SCALE: 1/2" = 1' CASE 8 SHEET 60

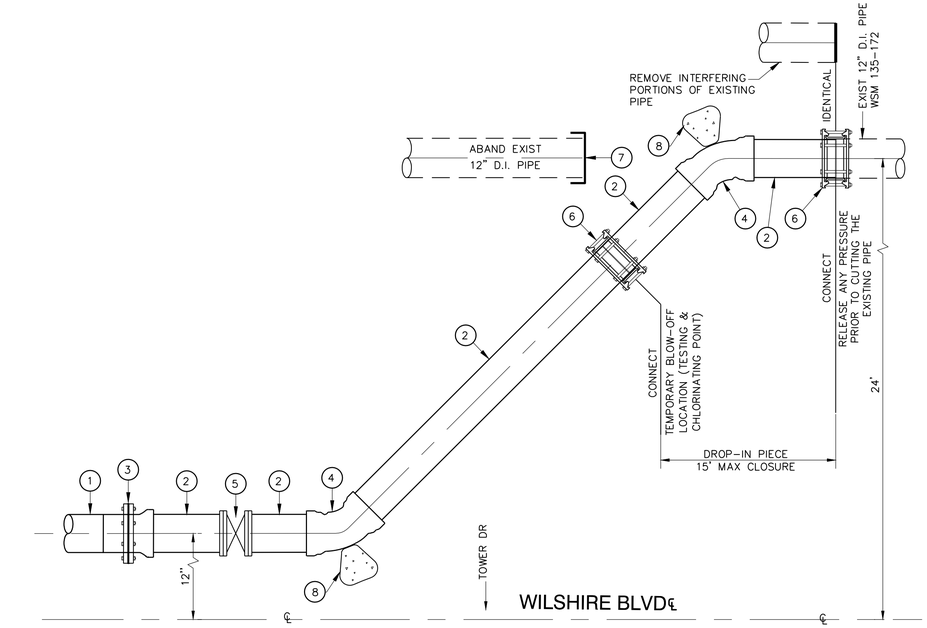

1. – 12" WELDED STEEL PIPE
2. – 12" D.I.R.G. PIPE
3. – 12" PRE–ASS'D INS JOINT TYPE I–E
4. – 12" X 45° HORIZ D.I.R.G. BEND (B–B) AWWA
5. – 12" BUTTERFLY VALVE (FLG X FLG)
6. – 12" COMPRESSION COUPLING *
7. – CAP OR PLUG
8. – CONCRETE THRUST BLOCK

* EX: MJ WITH CAM–LOCK RESTRAINED JOINTS, SMITH & BLAIR III OR APPROVED EQUAL.

N

WILSHIRE BLVD W/B AT TOWER DR. -N'RLY CONNECTION 9

SCALE: 1/2" = 1' CASE 9 SHEET 54

LEGEND:

X – CASE NUMBER

SHEET XX – SHEET NUMBER

C1056 AUR CONTRACT DRAWING NO. UW-022

PROJECT:
BEVERLY HILLS
WESTSIDE SUBWAY EXTENSION
ADVANCED UTILITY RELOCATIONS
WILSHIRE / LA CIENEGA STATION
TEMPORARY WATER RELOCATION
CONNECTION DETAILS

SCALE: AS SHOWN
F.B. NO. F.B.NO. PAGE -- TO --
DESIGNED C. MALDONADO DATE 02/07/14
DRAWN T. CABRERA DATE 02/07/14
CHECKED Z. MUDAR DATE 02/07/14

SUBMITTED _____ DATE _____
APPROVED _____ DATE _____
CITY ENGINEER

JOB NO. 1335
DRAWING NO. 7443
SHEET 63 OF 172 SHEET

DATE	DESCRIPTION	BY	REV
4/3/14	AMENDMENT 3	ZM	1
2/21/14	ISSUED FOR SOLICITATION	ZM	0

CITY OF BEVERLY HILLS, CALIFORNIA
CIVIL ENGINEERING DEPARTMENT

Metro
LOS ANGELES COUNTY
METROPOLITAN TRANSPORTATION AUTHORITY
777 SOUTH FIGUEROA ST. 11TH FLOOR
LOS ANGELES, CA 90017

PARSONS BRINCKERHOFF

PREPARED UNDER THE SUPERVISION OF:

NAME: ZAFER MUDAR LIC. # C64154; EXPIRES 12/31/14 DATE

REGISTERED PROFESSIONAL ENGINEER ZAFER MUDAR No. C64154 EXPIRES: 12/31/2014 CIVIL STATE OF CALIFORNIA

Plot Date & Time: 4/7/2014 2:52:27 PM Plotted by: Nocon,Roque
DWG Filename: L:\LA\WSBV\CADD\VZ_UTILITIES\CNTRCT\PDF\BNSHWATER\DETAILS\C1056UWV22.DWG

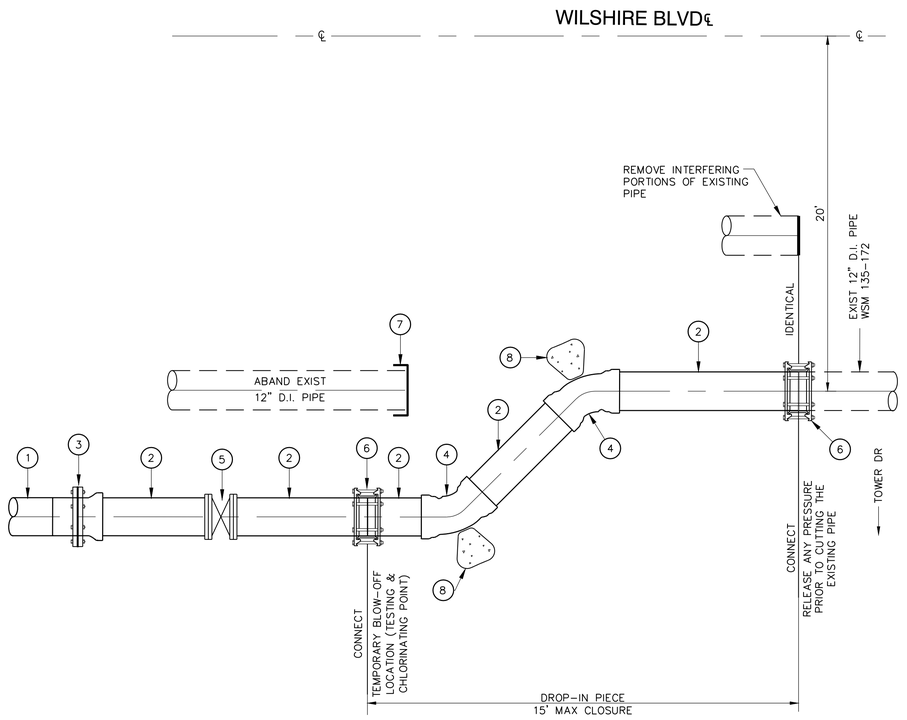

(1) – 12" WELDED STEEL PIPE
(2) – 12" D.I.R.G. PIPE
(3) – 12" PRE–ASS'D INS JOINT TYPE I–E
(4) – 12" X 45° HORIZ D.I.R.G. BEND (B–B) AWWA
(5) – 12" BUTTERFLY VALVE (FLG X FLG)
(6) – 12" COMPRESSION COUPLING *
(7) – CAP OR PLUG
(8) – CONCRETE THRUST BLOCK

* EX: MJ WITH CAM–LOCK RESTRAINED JOINTS, SMITH & BLAIR III OR APPROVED EQUAL.

WILSHIRE BLVD E/B AT TOWER DR -S'RLY CONNECTION (10)

SCALE: 1/2" = 1' — CASE 10 — SHEET 58

(1) – 8" WELDED STEEL PIPE
(2) – 8" D.I.R.G. PIPE
(3) – 8" PRE–ASS'D INS JOINT TYPE I–E
(4) – 8" X 45° HORIZ D.I.R.G. BEND (B–B) AWWA
(5) – 8" COMPRESSION COUPLING *
(6) – 8" x 18° HORIZ STL. BEND
(7) – 8" x 8" X 6" D.I. R.G. TEE
(8) – CAP OR PLUG
(9) – CONCRETE THRUST BLOCK
(10) – 8" BUTTERFLY VALVE (FLG XFLG)
(11) – FIRE HYDRANT LATERAL, GATE VALVE, AND ASSEMBLY.

* EX: MJ WITH CAM–LOCK RESTRAINED JOINTS, SMITH & BLAIR III OR APPROVED EQUAL.

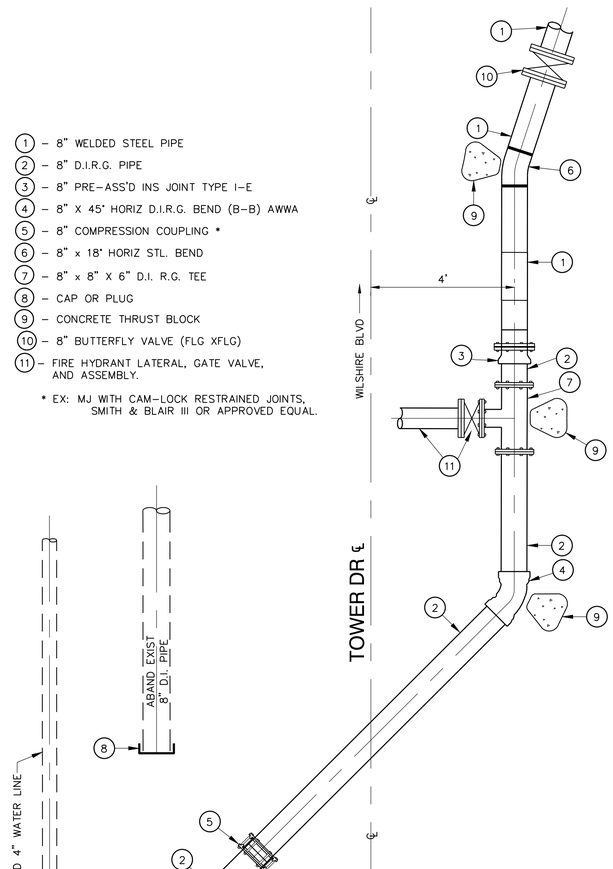

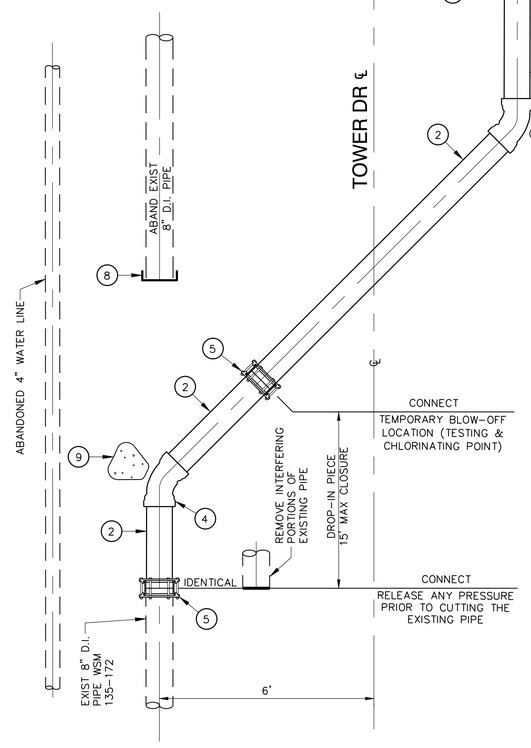

CONNECTION DETAIL TOWER DR - SOUTH (11)

SCALE: 1/2" = 1' — CASE 11 — SHEET 60

HORIZONTAL AND VERTICAL LOCATIONS TO BE VERIFIED IN THE FIELD AND ENGINEER NOTIFIED OF ANY DISCREPANCIES PRIOR TO CONSTRUCTION.

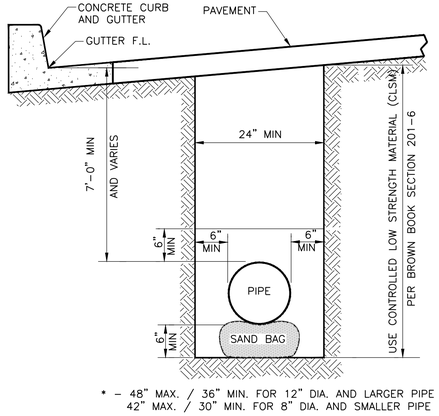

* – 48" MAX. / 36" MIN. FOR 12" DIA. AND LARGER PIPE
42" MAX. / 30" MIN. FOR 8" DIA. AND SMALLER PIPE

TYPICAL TRENCH SECTION

N.T.S.

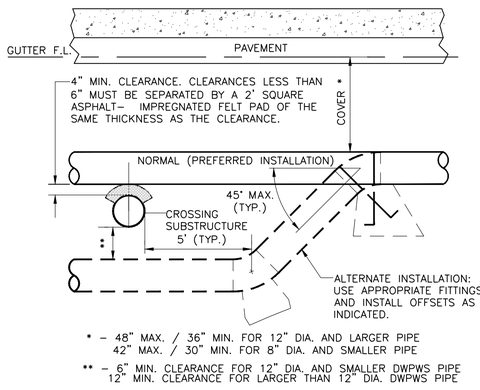

* – 48" MAX. / 36" MIN. FOR 12" DIA. AND LARGER PIPE
42" MAX. / 30" MIN. FOR 8" DIA. AND SMALLER PIPE
** – 6" MIN. CLEARANCE FOR 12" DIA. AND SMALLER DWPWS PIPE
12" MIN. CLEARANCE FOR LARGER THAN 12" DIA. DWPWS PIPE

TYPICAL SUBSTRUCTURE CROSSING DETAIL

N.T.S.

LEGEND:
X = CASE NUMBER
SHEET XX = SHEET NUMBER

C1056 AUR CONTRACT DRAWING NO. UW-023

PROJECT:
BEVERLY HILLS
WESTSIDE SUBWAY EXTENSION
ADVANCED UTILITY RELOCATIONS
WILSHIRE / LA CIENEGA STATION
TEMPORARY WATER RELOCATION
CONNECTION DETAILS

Metro
LOS ANGELES COUNTY
METROPOLITAN TRANSPORTATION AUTHORITY
777 SOUTH FIGUEROA ST. 11TH FLOOR
LOS ANGELES, CA 90017
PREPARED UNDER THE SUPERVISION OF:
NAME: ZAFER MUDAR LIC. # C64154; EXPIRES 12/31/14 DATE

PARSONS BRINCKERHOFF

REGISTERED PROFESSIONAL ENGINEER — ZAFER MUDAR — No. C64154 — EXPIRES: 12/31/2014 — CIVIL — STATE OF CALIFORNIA

SCALE: AS SHOWN			
F.B. NO. F.B.NO.PAGE -- TO --			
DESIGNED C. MALDONADO DATE 02/07/14			
DRAWN T. CABRERA DATE 02/07/14			
CHECKED Z. MUDAR DATE 02/07/14			
4/3/14	AMENDMENT 3	ZM	1
2/21/14	ISSUED FOR SOLICITATION	ZM	0
DATE	DESCRIPTION	BY	REV

SUBMITTED _____ DATE _____
APPROVED _____ DATE _____
CITY ENGINEER

JOB NO. 1335 — DRAWING NO. 7443
SHEET 64 OF 172 SHEET

CITY OF BEVERLY HILLS, CALIFORNIA
CIVIL ENGINEERING DEPARTMENT

Plot Date & Time: 4/7/2014 2:52:32 PM
Plotted by: Nadia Roque
DWG Reference: L:\LAWSBM\WAC8M\CADD\Y2_DTILITIES\CITYOFBH\SHWA1ER\DETAILS\C1056UW023.DWG

HORIZONTAL AND VERTICAL LOCATIONS TO BE VERIFIED IN THE FIELD AND ENGINEER NOTIFIED OF ANY DISCREPANCIES PRIOR TO CONSTRUCTION.

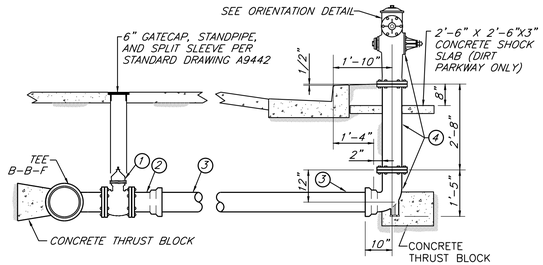

ELEVATION

NOTES:

1. THIS FIRE HYDRANT INSTALLATION IS GENERALLY USED WHEN CONNECTING TO A PROPOSED DUCTILE IRON WATER MAIN EXTENSION.
2. ALL PUSH-ON JOINTS SHALL BE RESTRAINED WITH JOINT-LOCK GASKETS.
3. *LENGTH OF LATERAL IS DEFINED AS THE DISTANCE MEASURED ALONG THE LATERAL FROM THE MAIN TO THE CURB FACE OR TO THE FIRE HYDRANT IN THE ABSENCE OF CURB.
4. SEE STANDARD DRAWING A9461 FOR PLACEMENT OF FIRE HYDRANTS IN THE ABSENCE OF A LEVEL PAD.

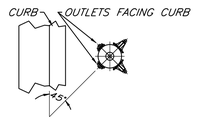

ORIENTATION DETAIL

ITEM	QTY.	MATERIAL DESCRIPTION
1	1	6" X 250# D.I. FLANGED GATE VALVE
2	1	6" D.I. R.G. FLANGE/BELL ADAPTOR AWWA
3	*	6" X 0.31" D.I. R.G. PIPE AWWA
4	1	2-1/2" X 4" DOUBLE-OUTLET F.H. ASSEMBLY

DOUBLE-OUTLET FIRE HYDRANT INSTALLATION (D.I. PIPE) 13

N.T.S. -

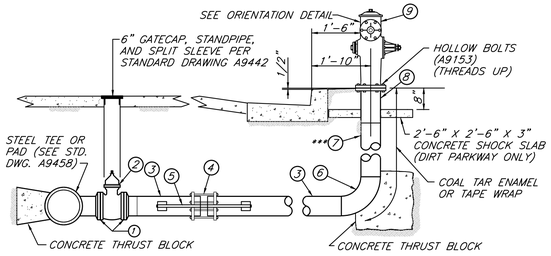

ELEVATION

NOTES:

1. THIS FIRE HYDRANT INSTALLATION IS GENERALLY USED WHEN CONNECTING TO AN EXISTING OR PROPOSED STEEL WATER MAIN WITH A MAXIMUM STATIC PRESSURE OF 200 PSI OR LESS.
2. PROVIDE CATHODIC PROTECTION IN ACCORDANCE WITH LATEST DWPWS STANDARDS.
3. *LENGTH OF LATERAL IS DEFINED AS THE DISTANCE MEASURED ALONG THE LATERAL FROM THE MAIN TO THE CURB FACE OR TO THE FIRE HYDRANT IN THE ABSENCE OF CURB.
4. SEE STANDARD DRAWINGS A9459 AND A9460 FOR PLACEMENT OF FIRE HYDRANTS IN THE ABSENCE OF A CURB.
5. SEE STANDARD DRAWING A9461 FOR PLACEMENT OF FIRE HYDRANTS IN THE ABSENCE OF A LEVEL PAD.
6. PROVIDE GALVANIC CATHODIC PROTECTION TEST STATION (TYPE 1) PER NOTES AND DETAILS ON SHEET 12.

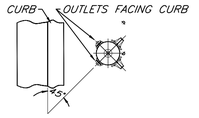

ORIENTATION DETAIL

ITEM	QTY.	MATERIAL DESCRIPTION
1	2	6" X 150# STEEL WELD NECK FLANGE
2	1	6" X 200# C.I. FLANGED GATE VALVE
3	*	6-5/8" O.D. X 1/4" EN. UC., C.L. & C., S.J. WLD STL. PIPE
** 4	1	6" STEEL MECHANICAL COUPLING (NON-INSULATING)
** 5	1	ANCHOR BOX ASSEMBLY PER STD. DWG. A9194
6	1	6" X 90° LONG RADIUS STEEL WELD ELBOW
7	3'±	6-5/8" O.D. X 1/4" EN. UC., C.L. & C., S.J., WLD STL. PIPE
8	1	6" F.H. STEEL WELD NECK FLANGE (6 11/16" HOLES EQUALLY SPACED ON 9.375" B.C.)
9	1	2-1/2" X 4" DOUBLE-OUTLET F.H. TOP

** REQUIRED ONLY IF LENGTH OF LATERAL EXCEEDS 10'.

DOUBLE-OUTLET FIRE HYDRANT INSTALLATION (STEEL PIPE) 12

N.T.S. -

2' 1' 0' 2'
GRAPHIC SCALE
VERTICAL SCALE: 1" = 2'

20' 10' 0' 20'
GRAPHIC SCALE
HORIZONTAL SCALE: 1" = 20'

C1056 AUR CONTRACT DRAWING NO. UW-024

PROJECT:
BEVERLY HILLS
WESTSIDE SUBWAY EXTENSION
ADVANCED UTILITY RELOCATIONS
WILSHIRE / LA CIENEGA STATION
TEMPORARY WATER RELOCATION
STANDARD DETAILS

SCALE: AS SHOWN
F.B. NO. F.B.NO.PAGE -- TO --

DESIGNED C. MALDONADO DATE 02/07/14
DRAWN T. CABRERA DATE 02/07/14
CHECKED Z. MUDAR DATE 02/07/14

DATE	DESCRIPTION	BY	REV
4/3/14	AMENDMENT 3	ZM	0

SUBMITTED _____ DATE _____
APPROVED _____ DATE _____
CITY ENGINEER

JOB NO. 1335
DRAWING NO. 7443
SHEET 65 OF 172 SHEET

CITY OF BEVERLY HILLS, CALIFORNIA
CIVIL ENGINEERING DEPARTMENT

Metro
LOS ANGELES COUNTY METROPOLITAN TRANSPORTATION AUTHORITY
777 SOUTH FIGUEROA ST. 11TH FLOOR
LOS ANGELES, CA 90017

PARSONS BRINCKERHOFF

PREPARED UNDER THE SUPERVISION OF:

NAME: ZAFER MUDAR LIC. # C64154; EXPIRES 12/31/14 DATE

REGISTERED PROFESSIONAL ENGINEER
ZAFER MUDAR
No. C64154
EXPIRES: 12/31/2014
CIVIL
STATE OF CALIFORNIA

DWG: Hardcopy L:\LA\WBW\WA-CBM\CADD\VZ_UTILITIES\UTW\BEVERLY\DETAILS\C1056UW024.DWG Plot Date & Time: 4/1/2014 2:52:36 PM Plotted by: Nadon,Roque

HORIZONTAL AND VERTICAL LOCATIONS TO BE VERIFIED IN THE FIELD AND ENGINEER NOTIFIED OF ANY DISCREPANCIES PRIOR TO CONSTRUCTION.

NOTES:

1. METER BOXES SHALL BE LOCATED AT LEAST 4 FEET OUTSIDE THE TOP OF THE DRIVEWAY "X".
2. SOLDER AND FLUX SHALL NOT CONTAIN LEAD.
3. LATERAL SHALL BE FLUSHED WITH WATER TO REMOVE FLUX RESIDUE.
4. SEE STANDARD DRAWING A9477 FOR PIPE CONNECTION REQUIREMENTS.

MATERIAL LIST

ITEM	QTY.	DESCRIPTION	DWG. NO.	MAT. CODE
1	1	#2 CONCRETE HINGED COVER	B-5050-4	39-01-210
2	1	#2 PLASTIC METER BOX	A-9420	39-01-250
3	1	1" SEBILOY FEMALE N.P.T. CURB BALL VALVE W/LOCKWING	-------	47-26-485
4	1	1" FEDERALLOY MALE COPPER TUBING TO MALE N.P.T. ELBOW	A-9237	46-06-233
5	VAR.	1" COPPER TUBING	-------	42-06-660
6	VAR.	1" COPPER SOLDER COUPLING	-------	42-75-169
7	1	1" FEDERALLOY INSULATING ADAPTOR	-------	46-13-100
8	1	1" FEDERALLOY MALE CORPORATION THREAD TO MALE COPPER TUBING CORPORATION BALL VALVE	-------	46-26-464
9	1	1" STEEL CORPORATION THREAD WELD COUPLING	A-9364	13-06-171

1" DOMESTIC SERVICE INSTALLATION (STL. PIPE) 17

N.T.S. -

NOTES:

1. METER BOXES SHALL BE LOCATED AT LEAST 4 FEET OUTSIDE THE TOP OF THE DRIVEWAY "X".
2. SOLDER AND FLUX SHALL NOT CONTAIN LEAD.
3. LATERAL SHALL BE FLUSHED WITH WATER TO REMOVE FLUX RESIDUE.
4. SEE STANDARD DRAWING A9477 FOR PIPE CONNECTION REQUIREMENTS.

MATERIAL LIST

ITEM	QTY.	DESCRIPTION	DWG. NO.	MAT. CODE
1	1	#3 REINFORCED CONCRETE POLYMER COVER	B-5096	39-01-357
2	1	CAST IRON CENTERPIECE	A-9290	39-01-190
3	1	#3 PLASTIC METER BOX	A-9422	39-01-258
4	1	2" FEDERALLOY FLANGE CURB BALL VALVE W/LOCKWING	-------	46-29-495
5	1	2" BRZ. STREET ELBOW	A-9314	42-09-239
6	1	2" FEDERALLOY MALE COPPER TUBING TO MALE N.P.T. ELBOW	A-9237	46-09-233
7	VAR.	2" COPPER TUBING	-------	42-09-663
8	VAR.	2" COPPER SOLDER COUPLING	-------	42-75-182
9	1	2" FEDERALLOY INSULATING ADAPTOR	-------	46-13-102
10	1	1-1/2" X 2" FEDERALLOY MALE CORPORATION THREAD TO MALE COPPER TUBING CORPORATION BALL VALVE	-------	46-28-462
11	1	1-1/2" STEEL CORPORATION THREAD WELD COUPLING	A-9365	13-08-171

2" DOMESTIC SERVICE INSTALLATION (STL. PIPE) 16

N.T.S. -

NOTES:

1. SOLDER AND FLUX SHALL NOT CONTAIN LEAD.
2. LATERAL SHALL BE FLUSHED WITH WATER TO REMOVE FLUX RESIDUE.

MATERIAL LIST

ITEM	QTY.	DESCRIPTION	DWG. NO.	MAT. CODE
1	1	1" FEDERALLOY COMPRESSION COUPLING	-------	46-06-101
2	VAR.	1" COPPER TUBING	-------	42-06-660
3	VAR.	1" COPPER SOLDER COUPLING	-------	42-75-169
4	1	1" FEDERALLOY INSULATING ADAPTOR	-------	46-13-100
5	1	1" FEDERALLOY MALE CORPORATION THREAD TO MALE COPPER TUBING CORPORATION BALL VALVE	-------	46-26-464
6	1	1" STEEL CORPORATION THREAD WELD COUPLING	A-9364	13-06-171

1" SERVICE METER RECONNECTION TO NEW MAIN (STEEL PIPE) 15

N.T.S. -

NOTES:

1. SOLDER AND FLUX SHALL NOT CONTAIN LEAD.
2. LATERAL SHALL BE FLUSHED WITH WATER TO REMOVE FLUX RESIDUE.

MATERIAL LIST

ITEM	QTY.	DESCRIPTION	DWG. NO.	MAT. CODE
1	1	1-1/2" FEDERALLOY COMPRESSION COUPLING	-------	46-08-101
2	VAR.	1-1/2" COPPER TUBING	-------	42-08-663
3	VAR.	1-1/2" COPPER SOLDER COUPLING	-------	42-75-177
4	1	1-1/2" FEDERALLOY INSULATING COUPLING	-------	46-13-101
5	1	1-1/2" FEDERALLOY MALE CORPORATION THREAD TO MALE COPPER TUBING CORPORATION BALL VALVE	-------	46-28-464
6	1	1-1/2" STEEL CORPORATION THREAD WELD COUPLING	A-9365	13-08-171

1-1/2" SERVICE METER RECONNECTION TO NEW MAIN (STEEL PIPE) 14

N.T.S. -

CONSTRUCTION ITEMS:

1. – 6" D.I. PIPE
2. – PROP. 6" MECH-COUPLING – REMOVE INTERFERING PORTIONS OF EXIST 6" PIPE AND RECONNECT NEW 6' PIPE TO EXISTING.
3. – PROP. 6"X90° D.I. BEND W/ THRUSTBLOCK
4. – PROP. 6" D.I. PIPE
5. – PROP. 6" PRE ASS'D INSULATING FLANGE TYPE I-E
6. – PROP. 6"X90° WELDED STEEL ELBOW W/ TRHUSTBLOCK
7. – PROP. 6" WELDED STEEL PIPE
8. – PROP. 6"X45° WELDED STEEL ELBOW W/ TRHUSTBLOCK
9. – PROP 8"X8"X6" WELDED STEEL TEE W/ TRHUSTBLOCK

* ESTIMATED DEPTH, CONTRACTOR IS TO CONFIRM AND/OR CORRECT ALL EXISTING VERTICAL ELEVATIONS PRIOR TO CONSTRUCTION

PROP. 6" WATER SERVICE RECONNECTION FOR 8383 WILSHIRE BLVD 21

SCALE: N.T.S. SHEET 54

NOTES:

1. SOLDER AND FLUX SHALL NOT CONTAIN LEAD.
2. LATERAL SHALL BE FLUSHED WITH WATER TO REMOVE FLUX RESIDUE.

MATERIAL LIST

ITEM	QTY.	DESCRIPTION	DWG. NO.	MAT. CODE
1	1	BRONZE COMPRESSION COUPLING	-------	46-06-101
2	VAR.	1" COPPER TUBING	-------	42-06-660
3	VAR.	1" COPPER SOLDER COUPLING	-------	42-75-169
4	1	1" FEDERALLOY MALE CORPORATION THREAD TO MALE COPPER TUBING CORPORATION BALL VALVE	-------	46-26-464
5	1	1" X 12" DIA.-(19) BRONZE SERVICE SADDLE 4"DIA.-(13); 6"DIA.-(15); 8"DIA.-(17); 12"DIA.-(19)	-------	42-19-071

1" SERVICE METER RECONNECTION (D.I. PIPE) 20

N.T.S. -

NOTES:

1. CONNECTIONS TO WATER MAIN SHALL BE IDENTICAL TO 2" SERVICE CONNECTIONS.
2. MANIFOLD AND METERS ARE SUPPLIED BY DWP-WS AS AN ASSEMBLY FOR DEVELOPER-INSTALLED SERVICE.
3. SOLDER AND FLUX SHALL NOT CONTAIN LEAD.
4. SERVICE LATERALS SHALL BE FLUSHED WITH WATER PRIOR TO INSTALLATION OF METERS TO REMOVE FLUX RESIDUE.
5. METER BOXES SHALL BE LOCATED AT LEAST 4 FEET OUTSIDE THE TOP OF THE DRIVEWAY "X".

MATERIAL LIST

ITEM	QTY.	DESCRIPTION	DWG. NO.	MAT. CODE
1	VAR.	2" COPPER TUBING	-------	42-09-663
2	2	2" FEDERALLOY MALE COPPER TUBING TO MALE N.P.T. ELBOW	A-9237	46-09-233
3	6	2" X 90° BRZ. ELL PIPE	A-9325	42-09-224
4	4	2" X 6" BRZ. STD. NIPPLE PIPE	-------	42-09-366
5	4	2" FEDERALLOY FLG. CURB BALL VALVE W/ LOCKWING	-------	46-29-495
6	2	2" METER	-------	44-83-901
7	2	2" X 2-1/2" BRZ. STD. NIPPLE PIPE	-------	42-09-360
8	2	2" X 12" BRZ. STD. NIPPLE PIPE	-------	42-09-369
9	2	3" X 2" BRZ. HEX. BUSHING	-------	42-11-039
10	1	3" BRZ. STD. TEE PIPE	-------	42-11-620
11	1	3" X 18" BRZ. STD. NIPPLE PIPE	-------	42-11-372
12	2	#3 PLASTIC METER BOX	A-9422	39-01-258
13	2	#3 REINFORCED CONCRETE POLYMER COVER (CENTER HOLE)	B-5096	39-01-357
14	2	CAST IRON CENTERPIECE	A-9290	39-01-190

3" EQUIVALENT SERVICE IN PLASTIC METER BOXES 19

N.T.S. (SIDEWALK LOADING ONLY) -

NOTES:

1. SOLDER AND FLUX SHALL NOT CONTAIN LEAD.
2. LATERAL SHALL BE FLUSHED WITH WATER TO REMOVE FLUX RESIDUE.

MATERIAL LIST

ITEM	QTY.	DESCRIPTION	DWG. NO.	MAT. CODE
1	1	2" FEDERALLOY COMPRESSION COUPLING	-------	46-09-101
2	VAR.	2" COPPER TUBING	-------	42-09-663
3	VAR.	2" COPPER SOLDER COUPLING	-------	42-75-182
4	1	2" FEDERALLOY INSULATING ADAPTOR	-------	46-13-102
5	1	1-1/2" X 2" FEDERALLOY MALE CORPORATION THREAD TO MALE COPPER TUBING CORPORATION BALL VALVE	-------	46-28-462
6	1	1-1/2" STEEL CORPORATION THREAD WELD COUPLING	A-9365	13-08-171

2" SERVICE METER RECONNECTION TO NEW MAIN (STEEL PIPE) 18

N.T.S. -

GRAPHIC SCALE
VERTICAL SCALE: 1" = 2'

GRAPHIC SCALE
HORIZONTAL SCALE: 1" = 20'

C1056 AUR CONTRACT DRAWING NO. UW-025

Metro
LOS ANGELES COUNTY
METROPOLITAN TRANSPORTATION AUTHORITY

PARSONS BRINCKERHOFF
777 SOUTH FIGUEROA ST. 11TH FLOOR
LOS ANGELES, CA 90017
PREPARED UNDER THE SUPERVISION OF:
NAME: ZAFER MUDAR LIC. # C64154; EXPIRES 12/31/14 DATE

REGISTERED PROFESSIONAL ENGINEER ZAFER MUDAR No. C64154 EXPIRES: 12/31/2014 CIVIL STATE OF CALIFORNIA

SCALE: AS SHOWN
F.B. NO. F.B.NO. PAGE -- TO --
DESIGNED C. MALDONADO DATE 02/07/14
DRAWN T. CABRERA DATE 02/07/14
CHECKED Z. MUDAR DATE 02/07/14

DATE	DESCRIPTION	BY	REV
4/3/14	AMENDMENT 3	ZM	0

PROJECT: BEVERLY HILLS
WESTSIDE SUBWAY EXTENSION
ADVANCED UTILITY RELOCATIONS
WILSHIRE / LA CIENEGA STATION
TEMPORARY WATER RELOCATION
STANDARD DETAILS

SUBMITTED ______ DATE ______
APPROVED ______ DATE ______
CITY ENGINEER

JOB NO. 1335
DRAWING NO. 7443
SHEET 66 OF 172 SHEET

CITY OF BEVERLY HILLS, CALIFORNIA
CIVIL ENGINEERING DEPARTMENT

DWG filename: L:\LAWSBIM\WACBM\CADD\12_UTILITIES\CITYOFBH\BHWATER\DETAILS\C1056UW025.DWG Plot Date & Time: 4/1/2014 2:52:41 PM Plotted by: Nacion,Roque

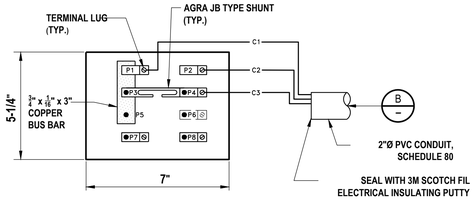

TYPE 1 GCPTS TERMINAL BOARD D

N.T.S.

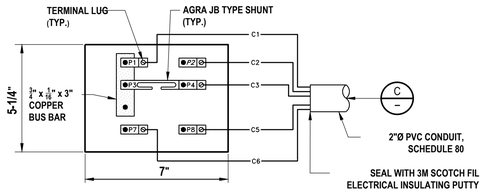

TYPE 2 GCPTS TERMINAL BOARD E

N.T.S.

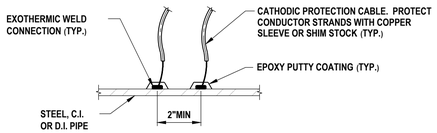

EXOTHERMIC WELD CONNECTION - DETAIL F

N.T.S.

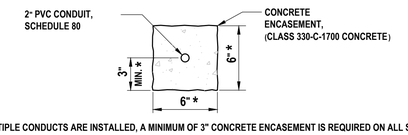

* - IF MULTIPLE CONDUCTS ARE INSTALLED, A MINIMUM OF 3" CONCRETE ENCASEMENT IS REQUIRED ON ALL SIDES.

CONDUIT ENCASEMENT - SECTION G

N.T.S.

DETAIL NOTES:

1. INSTALL THE GALVANIC ANODE CATHODIC PROTECTION SYSTEM COMPONENTS SHOWN HEREON IN ACCORDANCE WITH NOTES SHOWN HEREON, THE LOCATIONS INDICATED ON THE PLAN SHEETS, AND ONLY WHEN THE DIELECTRIC UNDERCOAT SYSTEM FOR THE WELDED STEEL PIPE IS COAL TAR ENAMEL OR EXTRUDED POLYOLEFIN.
2. PACKAGED GALVANIC ANODES MAY BE INSTALLED VERTICALLY OR HORIZONTALLY.
3. COLOR CODING OF HMWPE CABLES USED FOR STEEL PIPE: YELLOW WIRE–FOR NEW STEEL CARRIER PIPE; RED WIRE–FOR EXISTING STEEL CARRIER PIPE; ORANGE WIRE–FOR CASING.
4. ALL TERMINAL BOARDS TO BE INSTALLED BY THE CORROSION ENGINEER UNDER COBH SUPERVISION.

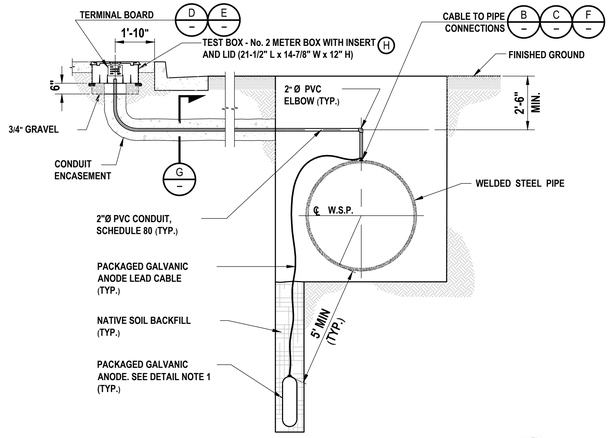

GALVANIC CATHODIC PROTECTION TEST STATION (GCPTS) A

SECTION 2,6

N.T.S.

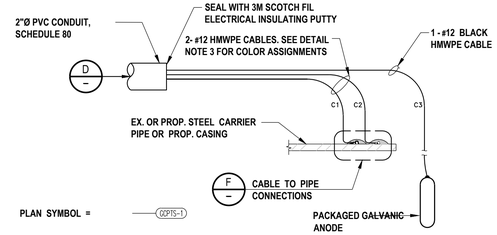

TYPE 1 GALVANIC CATHODIC PROTECTION TEST STATION (GCPTS-1) B

WIRE DIAGRAM

N.T.S.

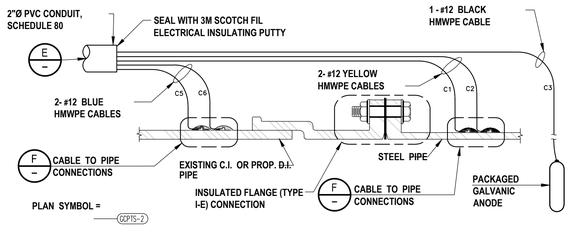

TYPE 2 GALVANIC CATHODIC PROTECTION TEST STATION (GCPTS - 2) WIRE DIAGRAM AT INSULATING JOINT C

N.T.S.

CORROSION MITIGATION NOTES

1. INSTALLATION OF CATHODIC PROTECTION MATERIALS AND TESTING OF THE CATHODIC PROTECTION SYSTEM SHALL BE DONE BY AN INDIVIDUAL CERTIFIED BY NACE INTERNATIONAL AS A CATHODIC PROTECTION SPECIALIST OR BY PERSONS UNDER THE SUPERVISION OF A CERTIFIED CATHODIC PROTECTION SPECIALIST. PROOF OF CERTIFICATION SHALL BE SUBMITTED TO THE ENGINEER.
2. SUBMIT TO THE ENGINEER CATALOG CUTS AND TECHNICAL DATA SHEETS OF THE PRODUCTS TO BE INSTALLED AS PART OF THE CATHODIC PROTECTION SYSTEM.
3. TEST CABLES SHALL BE SINGLE CONDUCTOR, #12 GAGE, STRANDED COPPER, WITH HMWPE INSULATION, RATED AT 600 VOLTS. TEST CABLE COLORS SHALL BE AS INDICATED ON THE DRAWINGS.
4. CONDUIT USED FOR THE CABLE INSTALLATIONS SHALL BE RIGID SCHEDULE 80 PVC. ALL FITTINGS USED FOR THE CONNECTION OF CONDUIT SECTIONS SHALL BE SCHEDULE 80 PVC.
5. CP TEST STATION TERMINAL BOARDS SHALL BE 1/4 INCH THICK MICARTA INSULATING PANELS WITH SHUNTS, TERMINAL LUGS, AND BRASS FASTENERS. DIMENSIONS AND CONFIGURATION OF THE TERMINAL BOARDS SHALL BE AS INDICATED ON THE DRAWINGS.
6. THE MAGNESIUM ANODES OF THE GALVANIC ANODE PACKAGES SHALL CONFORM TO ASTM B 843 CHEMICAL REQUIREMENTS FOR GRADE M1C HIGH POTENTIAL MAGNESIUM ANODES. THE MAGNESIUM ANODES SHALL MEET THE MINIMUM OPEN CIRCUIT POTENTIAL AND CURRENT EFFICIENCY REQUIREMENTS OF THE ASTM G 97 STANDARD TEST METHOD. THE ANODE PACKAGES SHALL WEIGH NOT LESS THAN 70 POUNDS AND CONTAIN A MAGNESIUM ANODE WEIGHING NOT LESS THAN 32 POUNDS PACKAGED IN A CLOTH BAG WITH A BACKFILL MIXTURE OF 75 PERCENT GYPSUM, 20 PERCENT BENTONITE CLAY, AND 5 PERCENT SODIUM SULFATE. THE GALVANIC ANODE PACKAGE SHALL HAVE A MAXIMUM LENGTH OF 30 INCHES. THE ANODE SHALL HAVE A FACTORY INSTALLED LEAD CABLE WHICH IS A SINGLE CONDUCTOR, #12 GAGE, STRANDED COPPER, WITH HMWPE INSULATION, RATED AT 600 VOLTS. THE LEAD CABLE SHALL BE OF SUFFICIENT LENGTH TO EXTEND CONTINUOUS AND UNSPLICED FROM THE INSTALLED LOCATION OF THE ANODE PACKAGE TO THE PIPELINE CONNECTION OR TO THE TEST STATION METER BOX CONNECTION, DEPENDING ON THE ANODE PACKAGE'S USAGE. THE ANODE PACKAGES SHALL BE DELIVERED TO AND STORED AT THE JOB SITE IN WATERPROOF BAGS.
7. CABLE CONNECTIONS TO THE PIPELINES SHALL BE MADE BY THE EXOTHERMIC WELD METHOD ON THE TOP OF THE INSTALLED PIPELINE. CABLE WELD CONNECTIONS SHALL BE COATED WITH A TWO–PART EPOXY PUTTY APPROVED BY THE ENGINEER. ANY RESIDUE OR DEBRIS SHALL BE REMOVED FROM AREAS TO BE COATED BEFORE THE PUTTY IS APPLIED.
8. PACKAGED ANODE INSTALLATION: A PACKAGED ANODE SHALL BE INSTALLED IN AN EXCAVATED HOLE ON EITHER SIDE OF THE PIPE. IT SHALL BE INSTALLED IN A POSITION SUCH THAT ANY PART OF THE MAGNESIUM ANODE IS A MINIMUM DISTANCE OF 5 FEET FROM THE PIPE SURFACE. THE PACKAGED ANODE SHALL BE BACKFILLED SUCH THAT A MINIMUM OF 6 INCHES OF NATIVE SOIL, COMPACTED FIRM, SURROUNDS IT IN THE EXCAVATION HOLE. AFTER BACKFILLING, WET THE INSTALLATION AREA WITH WATER TO SATURATION. THE ANODE CABLE SHALL BE ROUTED IN PVC CONDUIT TO EITHER A PIPELINE CONNECTION LOCATION OR A TEST STATION METER BOX, DEPENDING ON THE PACKAGED ANODE'S USAGE.
9. CATHODIC PROTECTION TEST STATION INSTALLATION: A CATHODIC PROTECTION TEST STATION SHALL BE INSTALLED AT THE NEAREST WELDED JOINT OF THE PIPELINE TO THE SURVEY STATION LOCATION INDICATED ON THE DRAWINGS. A CATHODIC PROTECTION TEST STATION SHALL BE INSTALLED IN ACCORDANCE WITH NOTES 7 AND 8 ABOVE AND THE RELATED DETAIL DRAWINGS.
10. THE CONTRACTOR SHALL PROCURE A ONE–GALLON SOIL SAMPLE AT THE SURVEY STATION LOCATIONS OF THE BEGINNING AND ENDING OF PIPELINE CONNECTION POINTS AND EACH ANODE STATION OR CATHODIC PROTECTION TEST STATION INSTALLATION LOCATION. THE SAMPLES SHALL BE TAKEN AT THE APPROXIMATE SPRING LINE ELEVATION OF THE INSTALLED PIPELINE. THE SAMPLES SHALL BE PROVIDED TO THE ENGINEER.
11. THE CORROSION PROTECTION SPECIALIST SHALL TEST ALL WELDED CABLE CONNECTIONS FOR ADHESION PRIOR TO BACKFILLING OF THE INSTALLED PIPELINE.
12. THE CORROSION PROTECTION SPECIALIST SHALL TEST INSULATED JOINTS FOR CONDUCTIVITY BEFORE THEY ARE INSTALLED, AFTER THE PIPELINE IS BACKFILLED, AND AFTER ALL CONNECTIONS TO EXISTING PIPELINES HAVE BEEN MADE.
13. THE CORROSION PROTECTION SPECIALIST SHALL PERFORM POTENTIAL TESTS AT EACH CATHODIC PROTECTION TEST STATION AFTER ALL CONNECTIONS TO THE PIPELINE ARE MADE AND IT IS COMPLETELY BACKFILLED. POTENTIAL TESTS SHALL BE TAKEN OF EACH TEST CABLE PRIOR TO CONNECTION TO THE TERMINAL BOARD AND OF EACH TERMINAL BOARD TEST POINT AFTER CABLE CONNECTIONS HAVE BEEN MADE.
14. THE CONTRACTOR SHALL PROVIDE THE ENGINEER WITH A REPORT, PREPARED BY THE CATHODIC PROTECTION SPECIALIST, OF ALL TESTS CONDUCTED FOR THE CONTRACT WORK WHICH INCLUDES TEST DATA, TEST RESULTS, DISCUSSION, AND RECOMMENDATIONS.
15. BOND CABLES SHALL BE SINGLE CONDUCTOR, #6 GAGE, STRANDED COPPER, WITH HMWPE INSULATION, RATED AT 600 VOLTS. BOND CABLES ARE INSTALLED ACROSS AND TO ALL VALVES AND MECHANICAL COUPLINGS IN THE PIPELINE WITH THE EXCEPTION OF INSULATED JOINTS OR INSULATED FLANGE CONNECTIONS.

C1056 AUR CONTRACT DRAWING NO. UW-026

PROJECT:
BEVERLY HILLS
WESTSIDE SUBWAY EXTENSION
ADVANCED UTILITY RELOCATIONS
WILSHIRE / LA CIENEGA STATION
TEMPORARY WATER RELOCATION
CATHODIC PROTECTION NOTES & DETAILS

Metro
LOS ANGELES COUNTY
METROPOLITAN TRANSPORTATION AUTHORITY
777 SOUTH FIGUEROA ST. 11TH FLOOR
LOS ANGELES, CA 90017

PARSONS BRINCKERHOFF

PREPARED UNDER THE SUPERVISION OF:
NAME: ZAFER MUDAR LIC. # C64154; EXPIRES 12/31/14 DATE

REGISTERED PROFESSIONAL ENGINEER — ZAFER MUDAR — No. C64154 — EXPIRES: 12/31/2014 — CIVIL — STATE OF CALIFORNIA

SCALE:	AS SHOWN
F.B. NO.	F.B.NO.PAGE -- TO --
DESIGNED	C. MALDONADO DATE 02/07/14
DRAWN	T. CABRERA DATE 02/07/14
CHECKED	Z. MUDAR DATE 02/07/14

DATE	DESCRIPTION	BY	REV
4/3/14	AMENDMENT 3	ZM	0

SUBMITTED _____ DATE _____
APPROVED _____ DATE _____
CITY ENGINEER

JOB NO. 1335 DRAWING NO. 7443
SHEET 67 OF 172 SHEET

CITY OF BEVERLY HILLS, CALIFORNIA
CIVIL ENGINEERING DEPARTMENT

DWG Filename: L:\LAWSBW\WA\BW\CADD\V2_UTILITIES\CP\PBH\PWATER\DETAILS\C1056UWD26.DWG Plot Date & Time: 4/7/2014 2:52:46 PM Plotted by: Nadia Roque

CITY OF BEVERLY HILLS - GENERAL NOTES

1. INDEMNIFICATION CLAUSE: THE CONTRACTOR AGREES AND SHALL:

   ASSUME SOLE AND COMPLETE RESPONSIBILITY OF THE JOBSITE CONDITIONS DURING THE COURSE OF CONSTRUCTION OF THIS PROJECT, INCLUDING THE SAFETY OF ALL PERSONS AND PROPERTIES. THAT THESE REQUIREMENTS SHALL APPLY CONTINUOUSLY AND NOT BE LIMITED TO NORMAL WORKING HOURS AND CONDITIONS. THE CONTRACTOR FURTHER AGREES TO DEFEND INDEMNITY AND METRO AND SOUTHERN CALIFORNIA EDISON (SCE), REPRESENTATIVES, AND ENGINEERS HARMLESS FROM ANY AND ALL LIABILITY, REAL OR ALLEGED IN CONNECTION WITH THE PERFORMANCE OF THE WORK ON THIS PROJECT.

2. PRIOR TO THE BEGINNING OF ANY CONSTRUCTION AND THROUGHOUT THE COURSE OF CONSTRUCTION WORK, THE CONTRACTOR SHALL FULLY COMPLY WITH "CALIFORNIA OCCUPATIONAL SAFETY AND HEALTH" ACT OF 1973 INCLUDING ALL REVISIONS AND AMENDMENTS THERETO

3. ALL WORK SHALL CONFORM TO THE LATEST EDITION OF GO 95, 128, AND THE STANDARD "SPECIFICATIONS FOR PUBLIC WORKS CONSTRUCTION", AS ADOPTED BY THE CITY, COUNTY OR STATE AS MODIFIED BY STANDARD PLANS AND ADDENDUMS.

4. THE EXISTENCE AND LOCATION OF UTILITIES AND OTHER AGENCIES FACILITIES AS SHOWN HEREON ARE OBTAINED BY A SEARCH OF AVAILABLE RECORDS. OTHER FACILITIES MAY EXIST, THE CONTRACTOR SHALL VERIFY PRIOR TO THE START OF CONSTRUCTION AND SHALL USE EXTREME CARE AND PROTECTIVE MEASURES TO PREVENT DAMAGE TO THESE FACILITIES. THE CONTRACTOR IS RESPONSIBLE FOR THE PROTECTION OF ALL UTILITY OR AGENCY FACILITIES WITHIN THE LIMITS OR WORK, WHETHER THEY ARE SHOWN ON THIS PLAN OR NOT

5. THE CONTRACTOR SHALL NOTIFY UNDERGROUND SERVICE ALERT (800) 227-2600 AT LEAST TWO WORKING DAYS PRIOR TO THE START OF ANY EXCAVATION. THE REQUEST FOR UNDERGROUND MARKINGS MUST INCLUDE THE CITY OF BEVERLY HILLS PUBLIC WORKS DEPARTMENT PERMIT NUMBER FOR THE CITY TO MARK OUT UTILITIES

6. THE CONTRACTOR SHALL NOTIFY THE CITY, COUNTY OR STATE ENGINEER INSPECTION DEPARTMENT, (310) 285-2505 , AT LEAST TWO DAYS BEFORE START OF ANY WORK REQUIRING THEIR INVOLVEMENT.

7. ALL WORK AREA AND STREET TRAFFIC CONTROL SHALL BE IN ACCORDANCE WITH THE SPECIFICATIONS OF THE WORK AREA TRAFFIC CONTROL HANDBOOK (WATCH) AND SPECIFICATIONS FROM THE CITY, COUNTY OR STATE.

8. THE CITY, COUNTY OR STATE SHALL SPECIFY THE EXPIRATION PERIOD OF THE PERMIT FOR THIS CONSTRUCTION PROJECT

9. THE MINIMUM COVER FOR ALL CONDUITS PLACED UNDERGROUND SHALL BE 30 INCHES TO THE FINISHED GRADE AT ALL TIMES.

10. THE CONTRACTOR SHALL TUNNEL ALL CURB AND GUTTERS AND BORE ALL CONCRETE DRIVEWAYS AND WALKWAYS AT THE DIRECTION OF THE CITY, COUNTY OR STATE INSPECTOR, (NO WATER JETTING ALLOWED)

11. ALL AC. AND/OR CONCRETE PAVEMENT SHALL BE REPLACED AT THE DIRECTION OF THE CITY, COUNTY OR STATE ENGINEERS.

12. ALL SHRUBS, PLANTS OR TREES THAT HAVE BEEN DAMAGED OR DISTURBED DURING THE COURSE OF THE WORK, SHALL BE REPLANTED AND/OR REPLACED SO AS TO RESTORE THE WORK SITE TO ITS ORIGINAL CONDITION

13. IF DAMAGE OCCURS TO THE CITY FACILITIES, THE CONTRACTOR SHALL IMMEDIATELY NOTIFY PUBLIC WORKS CUSTOMER SERVICE (310) 285-2467

14. AT LEAST TWO DAYS PRIOR TO THE COMMENCEMENT OF ANY WORK, NOTIFY THE POLICE TRAFFIC BUREAU (310) 550-4951 AND THE FIRE DEPARTMENT; (310) 281-2700.

15. THE CONTRACTOR WILL BE RESPONSIBLE FOR THE PROCESSING OF ALL APPLICATION PERMIT FORMS ALONG WITH THE REQUIRED LIABILITY INSURANCE FORMS, CLEARLY DEMONSTRATING THAT METRO, SOUTHERN CALIFORNIA EDISON (SCE), THE CITY, COUNTY OR STATE AS ALSO INSURED WITH THE REQUIRED LIABILITY INSURANCE IN THE AMOUNT OF $1,000,000.00 FOR THIS CONSTRUCTION PROJECT.

16. VAULTS, PEDESTALS, CONDUITS AND OTHER TYPES OF SUBSTRUCTURE ARE EITHER SPECIFIED ON THIS PLAN OR WILL BE SPECIFIED BY THE CONSTRUCTION ENGINEER. ANY AND ALL DEVIATIONS FROM THE SPECIFIED TYPES OF MATERIAL MUST BE APPROVED BY THE SYSTEM ENGINEER, IN WRITING BEFORE INSTALLATION THEREOF

17. COPIES OF ALL PERMITS MUST BE AVAILABLE FOR INSPECTION AT ALL TIMES AT THE SITE OF WORK. ALL ACTIVITIES SHALL BE CONDUCTED IN STRICT COMPLIANCE WITH ANY REQUIREMENTS AND/OR RESTRICTIONS INDICATED IN THE PERMIT

18. DURING THE COURSE OF THE WORK, PEDESTRIAN AND VEHICULAR ACCESS MUST BE MAINTAINED AT ALL TIMES. FLAGGERS MUST BE USED AT STRATEGIC LOCATIONS

19. ALL CONSTRUCTION ACTIVITIES WILL BE CONFINED TO THE CITY OF BEVERLY HILLS ENGINEERING DIVISION SPECIFIED WORK HOURS.

20. NO MATERIALS (NEW OR DEMOLISHED) SHALL REMAIN STOCKPILED IN THE PUBLIC RIGHT-OF-WAY AT THE END OF EACH WORK DAY.

21. NO EXCAVATION SHALL REMAIN OPEN OVER THE WEEKEND IF NO WORK IS SCHEDULED FOR THAT WEEKEND

22. NO VAULTS SHALL BE INSTALLED IN FRONT OF A DRIVEWAY APPROACH OR IN THE STREET GUTTER

23. NON-SKID CALTRANS APPROVED STEEL PLATES SHALL BE RECESSED IN TRENCH CROSSING MAJOR STREETS (AREA DESIGNATED BY CITY ENGINEER) AND INSTALLED PER CALTRANS SPECS. PAVEMENT SHALL BE COLD PLANED TO A DEPTH EQUAL TO THE THICKNESS OF THE PLATE AND TO A WIDTH AND LENGTH EQUAL TO THE DIMENSIONS OF THE PLATES.

24. STEEL PLATES USED FOR BRIDGING MUST EXTEND A MINIMUM OF 12" BEYOND EDGES OF TRENCH.

25. TEMPORARY PAVING WITH COLD MIX SHALL BE USED TO FEATHER THE EDGES OF THE PLATES TO MINIMIZE WHEEL IMPACT. LOOSE GRAVEL SHALL BE REMOVED AT THE DIRECTION OF THE CITY ENGINEER (MAY REQUIRE SWEEPING SEVERAL TIMES A DAY).

26. BRIDGING SHALL BE SECURED AGAINST DISPLACEMENT USING ADJUSTABLE CLEATS, SHIMS OR OTHER DEVICES.

27. NO ROCKWHEELING OR DITCH WITCH ALLOWED IN THE CITY.

28. INSTALL VAULTS NEXT TO CURB WHERE POSSIBLE.

29. THE CONTRACTOR SHALL HAVE COPIES OF THE PLANS ON THE PROJECT SITE AND BE FAMILIAR WITH ALL APPLICABLE STANDARDS AND SPECIFICATIONS.

30. REFER TO CITY OF BEVERLY HILLS STANDARD PLAN BH114 FOR PAVEMENT RESTORATION & TRENCH REPAIR.

31. FINAL CAP PAVING SHALL BE COMPLETED WITHIN TWO WEEKS AFTER EXCAVATION. BASE PAVING SHALL BE COMPLETED WITHIN ONE WEEK (OR SOONER AT THE DIRECTION OF THE CITY ENGINEER) AFTER EXCAVATION. TEMPORARY PAVING USING COLD MIX A.C. IS ACCEPTABLE AFTER ALLOWING 72 HOURS OF CURE TIME ON SLURRY MIX BACKFILL.

32. ALL BACKHOE EXCAVATION SHALL BE SAW CUT TO FACILITATE REMOVAL BY THE USE OF A POWER DRIVEN SAW. THE DEPTH OF CUT SHALL BE DEEP ENOUGH TO PRODUCE A CLEAN STRAIGHT BREAK. SAWCUT ALL REMOVALS TO A MINIMUM OF 2 INCHES IN DEPTH. EXISTING PCC SHALL BE CUT BEYOND THE CONFIGURATION OFTHE TRENCH OR EXCAVATION AREA AS MAY BE REQUIRED BY THE CITY ENGINEER TO ELIMINATE SMALL "FLOATING PIECES" OF CONCRETE. THE SAWCUT LIMITS SHALL BE LOCATED NO CLOSER THAN 3 FEET FROM A SCORE LINE/COLD JOINT OR ELSE REMOVAL SHALL BE FROM SCORE LINE TO SCORE LINE.

33. REPLACE ANY EXISTING STRIPING, MARKINGS AND SURVEY MONUMENTS THAT MAY HAVE BEEN REMOVED OR DAMAGED WITHIN TWO WEEKS OF EXCAVATION WORK.

34. SEND OUT NOTIFICATION LETTERS (SUBJECT TO CITY REVIEW) TO RESIDENTS ADJACENT TO WORK SITE (INCL. AREAS AFFECTED BY NOISE AND TRAFFIC) REGARDING THE CONSTRUCTION WORK.

35. ONE SET OF "AS-BUILT" BLUEPRINTS DENOTING ALL NEW SUBSURFACE INSTALLATIONS WITHIN THE PUBLIC RIGHT-OF-WAY OR CITY OWNED PROPERTIES SHALL BE SUBMITTED TO THE CITY ENGINEER'S OFFICE WITHIN 30 DAYS OF THE COMPLETION OF THE PROJECT.

36. ACCESS SHALL BE PROVIDED TO ALL FIRE HYDRANTS, VALVES, VAULTS, METERS, AND PULL BOXES AT ALL TIMES. TRAFFIC SIGNALS, PEDESTRIAN SIGNALS AND STOP SIGNS SHALL REMAIN UNOBSTRUCTED AT ALL TIMES.

37. AT THE END OF CONSTRUCTION, CONTRACTOR MAY BE REQUIRED TO REMOVE SOME UNDERGROUND SERVICE ALERT MARKINGS AT THE DIRECTION OF THE CITY ENGINEER.

38. DIRT NOT REMOVED BY CONVENTIONAL SWEEPING WILL REQUIRE WASH DOWN AS DIRECTION BY THE CITY ENGINEER. ALL RUN-OFF WILL BE ALLOWED TO DRAIN INTO THE STORM DRAIN SYSTEM.

39. ALL DIRT ON CONSTRUCTION VEHICLE TIRES SHALL BE REMOVED PRIOR TO LEAVING CONSTRUCTION SITE.

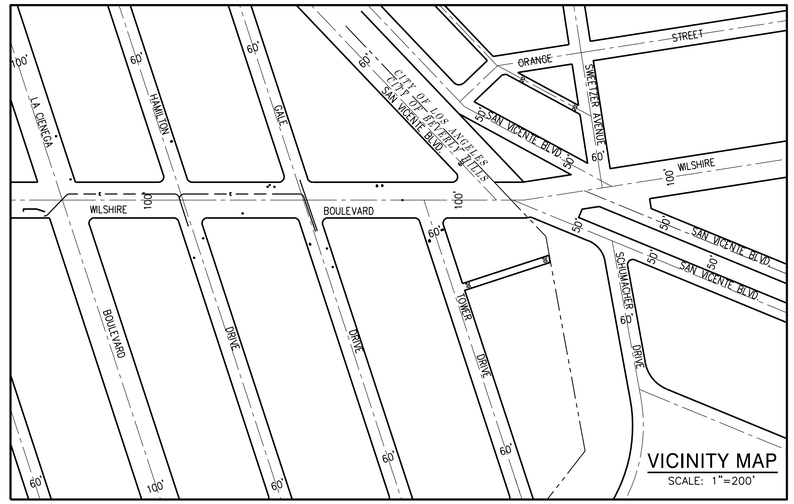

VICINITY MAP
SCALE: 1"=200'

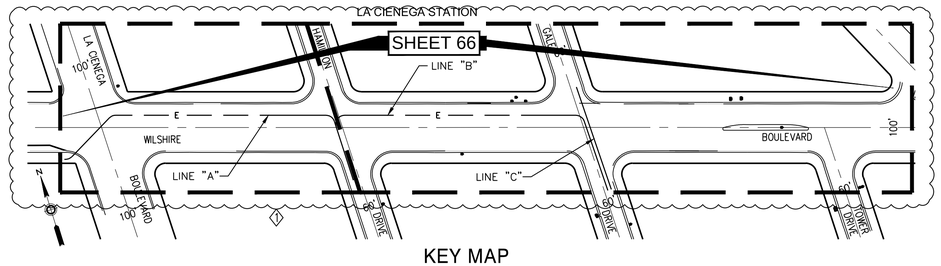

KEY MAP
SCALE: 1"=100'

DATUMS:

THE BASIS OF HORIZONTAL CONTROL FOR THIS PROJECT IS THE CALIFORNIA COORDINATE SYSTEM NAD83 ZONE 5 (2007.0 EPOCH) DETERMINED LOCALLY BY THE FOLLOWING NGS POINTS: EW9587, EW9595 AND AA9327

ELEVATIONS ARE BASED ON THE NAVD 1988 - SPECIFICALLY CITY OF LOS ANGELES BENCHMARKS 12-16091, 13-13450 AND 13-13352 (2000 ADJ)

DIGALERT
DIAL TOLL FREE
1-800-422-4133
AT LEAST TWO DAYS BEFORE YOU DIG
UNDERGROUND SERVICE ALERT OF SOUTHERN CALIFORNIA

REV	DATE	BY	APP	REG NO	EXPIRES	SEAL HOLDER	DESCRIPTION
1	4/3/14			C64154	12/31/14	ZAFER MUDAR	AMENDMENT 3
0	2/21/14			C64154	12/31/14	ZAFER MUDAR	ISSUED FOR SOLICITATION

DESIGNED BY J. VARIAS
DRAWN BY R. NACION
CHECKED BY Z. MUDAR
IN CHARGE N. HUMBY
DATE 02/21/2014

REGISTERED PROFESSIONAL ENGINEER ZAFER MUDAR NO.C64154 Exp.12-31-14 CIVIL STATE OF CALIFORNIA

Metro
PARSONS BRINCKERHOFF

LOS ANGELES COUNTY
METROPOLITAN TRANSPORTATION AUTHORITY

777 SOUTH FIGUEROA STREET, 11TH FLOOR
LOS ANGELES, CA 90017

PREPARED UNDER THE SUPERVISION OF:

NAME: ZAFER MUDARS LIC. # C64154: EXPIRES 12/31/14 DATE

WESTSIDE SUBWAY EXTENSION
ADVANCED UTILITY RELOCATION

WILSHIRE BLVD - LA CIENEGA STATION
SCE - POWER RELOCATION
GENERAL NOTES

CONTRACT NO C1056
DRAWING NO E-100 REV 1
SCALE 1" = 20'
SHEET NO 68

DWG filename: L:\LAWSBM\WACBM\CADD\12_UTILITIES\CITYOFBH\SCE EDISON\C1056UE100.DWG Plot Date & Time: 4/1/2014 2:52:52 PM Plotted by: Nacion,Roque

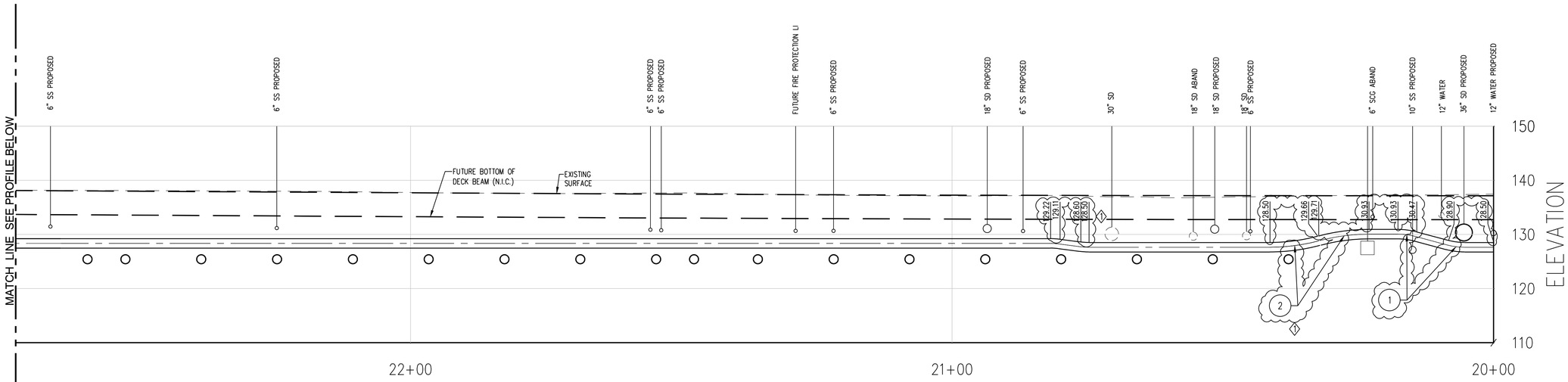

CONDUIT CURVE DATA
4-5" FROM HAMILTON TO LA CIENEGA

○	△	R	L	T	C
1	15°00'00"	12.50'	3.27'	1.65'	3.26'
2	15°00'00"	35.00'	9.16'	4.61'	9.30'
3	22°30'00"	35.00'	13.75'	6.96'	13.66'
4	22°30'00"	12.50'	4.91'	2.49'	4.88'
5	30°00'00"	12.50'	6.55'	3.35'	6.47'
6	45°00'00"	12.50'	6.55'	5.18'	6.57'

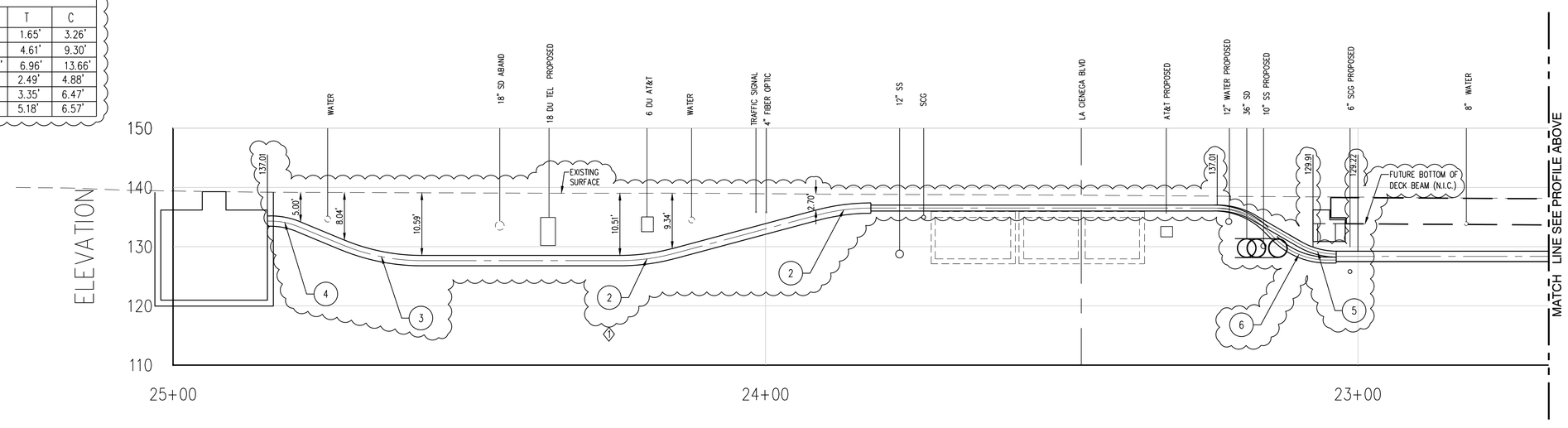

4-5" FROM HAMILTON DR TO LA CIENEGA BLVD

REV	DATE	BY	APP	REG NO	EXPIRES	SEAL HOLDER	DESCRIPTION
1	4/3/14			C64154	12/31/14	ZAFER MUDAR	AMENDMENT 3
0	2/21/14			C64154	12/31/14	ZAFER MUDAR	ISSUED FOR SOLICITATION

DESIGNED BY J. VARIAS
DRAWN BY R. NACION
CHECKED BY Z. MUDAR
IN CHARGE N. HUMBY
DATE 02/21/2014

REGISTERED PROFESSIONAL ENGINEER ZAFER MUDAR NO.C64154 Exp.12-31-14 CIVIL STATE OF CALIFORNIA

Metro
PARSONS BRINCKERHOFF

LOS ANGELES COUNTY
METROPOLITAN TRANSPORTATION AUTHORITY

777 SOUTH FIGUEROA STREET, 11TH FLOOR
LOS ANGELES, CA 90017

PREPARED UNDER THE SUPERVISION OF:

NAME: ZAFER MUDARS LIC. # C64154: EXPIRES 12/31/14 DATE

WESTSIDE SUBWAY EXTENSION
ADVANCED UTILITY RELOCATION

WILSHIRE BLVD – LA CIENEGA STATION
SCE – POWER RELOCATION PROFILES
SHEET 1 OF 5

CONTRACT NO C1056
DRAWING NO E-101 REV 1
SCALE 1" = 20'
SHEET NO 71

DWG filename: L:\LAWSBIM\WACBM\CADD\12_UTILITIES\CITYOFBH\SCE EDISON\C1056UE101P1.DWG Plot Date & Time: 4/2/2014 10:23:22 AM Plotted by: Nacion,Roque

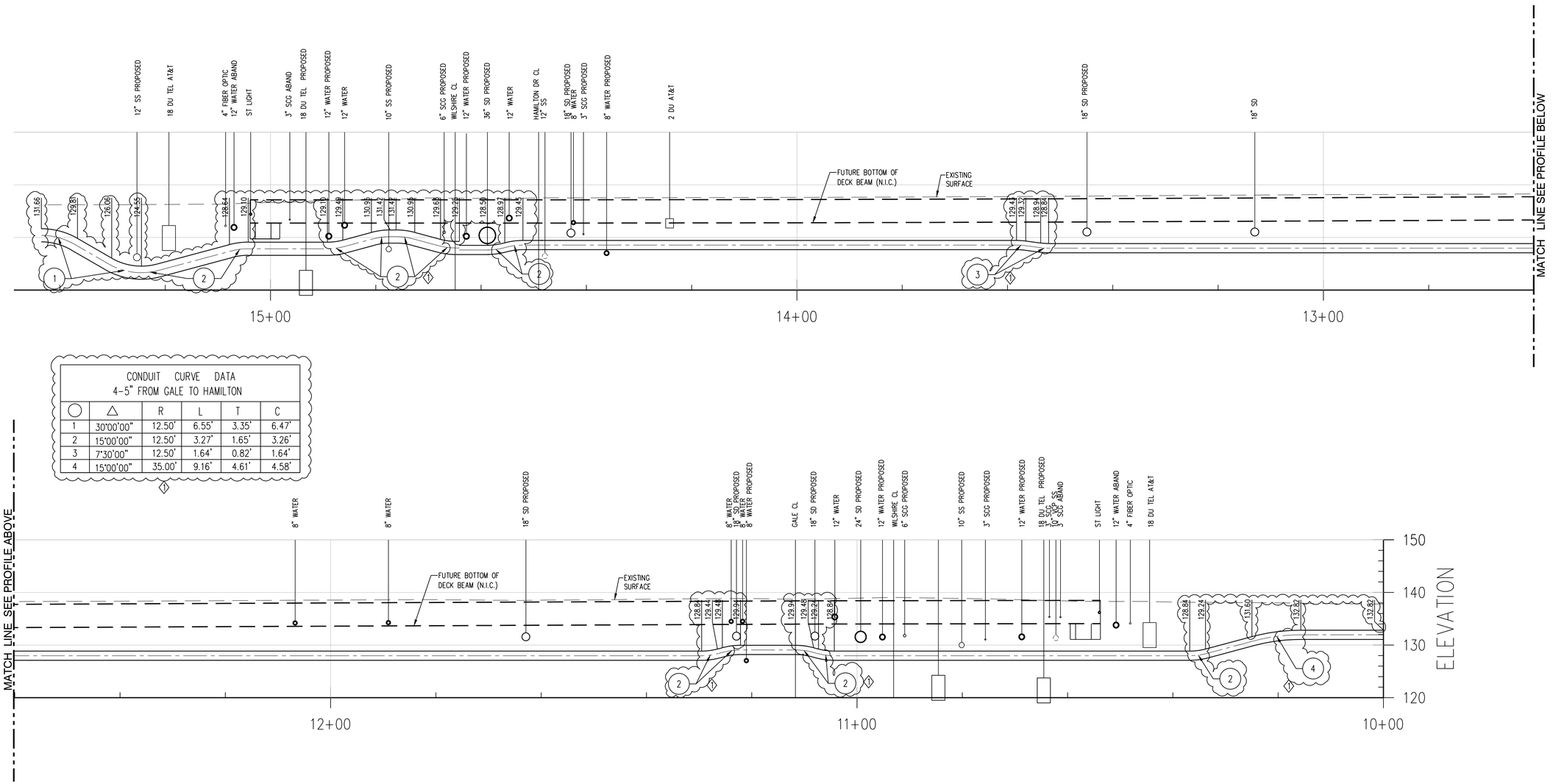

CONDUIT CURVE DATA 4-5" FROM GALE TO HAMILTON					
○	△	R	L	T	C
1	30°00'00"	12.50'	6.55'	3.35'	6.47'
2	15°00'00"	12.50'	3.27'	1.65'	3.26'
3	7°30'00"	12.50'	1.64'	0.82'	1.64'
4	15°00'00"	35.00'	9.16'	4.61'	4.58'

4-5" FROM GALE DR TO HAMILTON DR

REV	DATE	BY	APP	REG NO	EXPIRES	SEAL HOLDER	DESCRIPTION
1	4/3/14			C64154	12/31/14	ZAFER MUDAR	AMENDMENT 3
0	2/21/14			C64154	12/31/14	ZAFER MUDAR	ISSUED FOR SOLICITATION

DESIGNED BY J. VARIAS
DRAWN BY R. NACION
CHECKED BY Z. MUDAR
IN CHARGE N. HUMBY
DATE 02/21/2014

REGISTERED PROFESSIONAL ENGINEER ZAFER MUDAR NO.C64154 Exp.12-31-14 CIVIL STATE OF CALIFORNIA

Metro

PARSONS BRINCKERHOFF

LOS ANGELES COUNTY
METROPOLITAN TRANSPORTATION AUTHORITY

777 SOUTH FIGUEROA STREET, 11TH FLOOR
LOS ANGELES, CA 90017

PREPARED UNDER THE SUPERVISION OF:

NAME: ZAFER MUDARS LIC. # C64154: EXPIRES 12/31/14 DATE

WESTSIDE SUBWAY EXTENSION
ADVANCED UTILITY RELOCATION

WILSHIRE BLVD – LA CIENEGA STATION
SCE – POWER RELOCATION PROFILES
SHEET 2 OF 5

CONTRACT NO C1056
DRAWING NO E-102 REV 1
SCALE 1" = 20'
SHEET NO 72

DWG filename: L:\LAWSBM\WACBM\CADD\12_UTILITIES\CITYOFBH\SCE EDISON\C1056UE102P1.DWG Plot Date & Time: 4/2/2014 10:23:27 AM Plotted By: Nacion,Roque

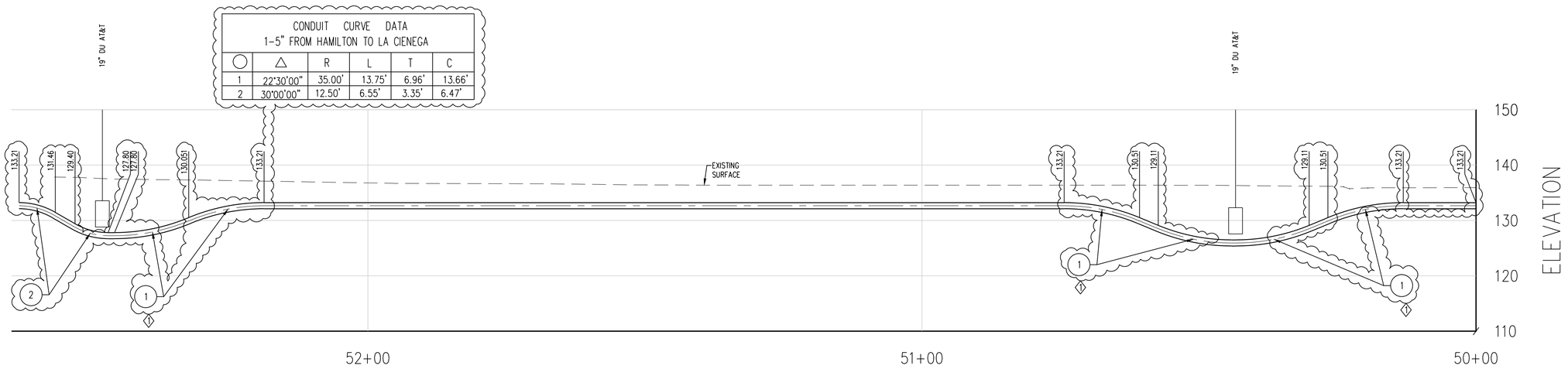

1-5" FROM HAMILTON DR TO LA CIENEGA BLVD

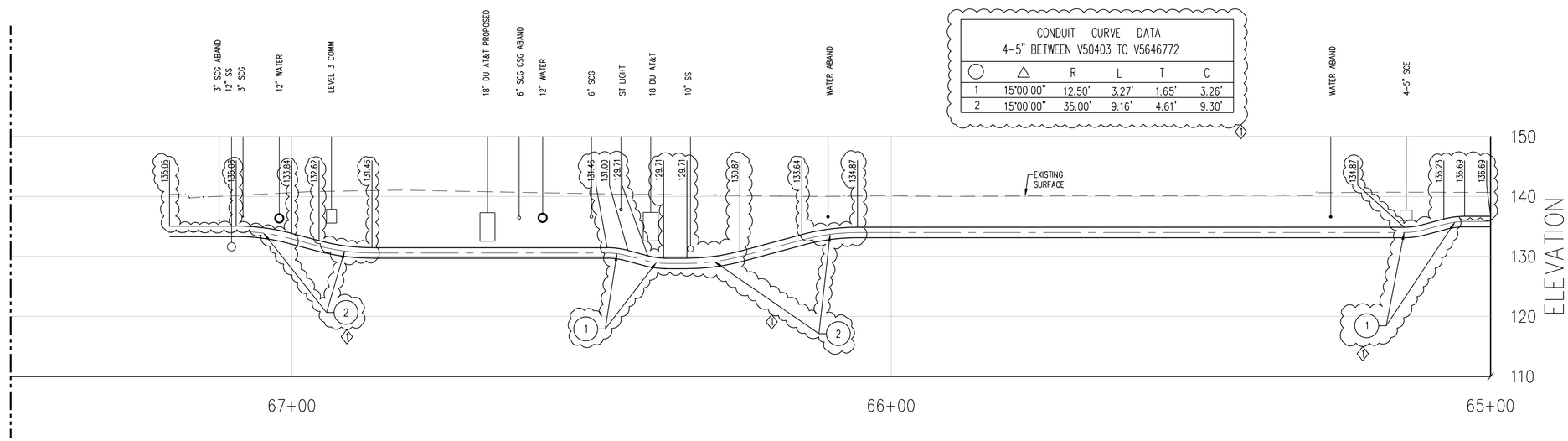

4-5" BETWEEN V5040384 TO V56467

REV	DATE	BY	APP	REG NO	EXPIRES	SEAL HOLDER	DESCRIPTION
1	4/3/14			C64154	12/31/14	ZAFER MUDAR	AMENDMENT 3
0	2/21/14			C64154	12/31/14	ZAFER MUDAR	ISSUED FOR SOLICITATION

DESIGNED BY J. VARIAS
DRAWN BY R. NACION
CHECKED BY Z. MUDAR
IN CHARGE N. HUMBY
DATE 02/21/2014

REGISTERED PROFESSIONAL ENGINEER — ZAFER MUDAR — NO.C64154 Exp.12-31-14 — CIVIL — STATE OF CALIFORNIA

Metro

PARSONS BRINCKERHOFF

LOS ANGELES COUNTY
METROPOLITAN TRANSPORTATION AUTHORITY

777 SOUTH FIGUEROA STREET, 11TH FLOOR
LOS ANGELES, CA 90017

PREPARED UNDER THE SUPERVISION OF:

NAME: ZAFER MUDARS LIC. # C64154 EXPIRES 12/31/14 DATE

WESTSIDE SUBWAY EXTENSION
ADVANCED UTILITY RELOCATION

WILSHIRE BLVD – LA CIENEGA STATION
SCE – POWER RELOCATION PROFILES
SHEET 3 OF 5

CONTRACT NO C1056
DRAWING NO E-103 REV 1
SCALE 1" = 20'
SHEET NO 73

DWG filename: L:\LAWSBM\WACBM\CADD\12_UTILITIES\01TOFBH\SCE EDISON\C1056UE10SP1.DWG Plot Date & Time: 4/2/2014 10:23:32 AM Plotted by: Nacion,Roque

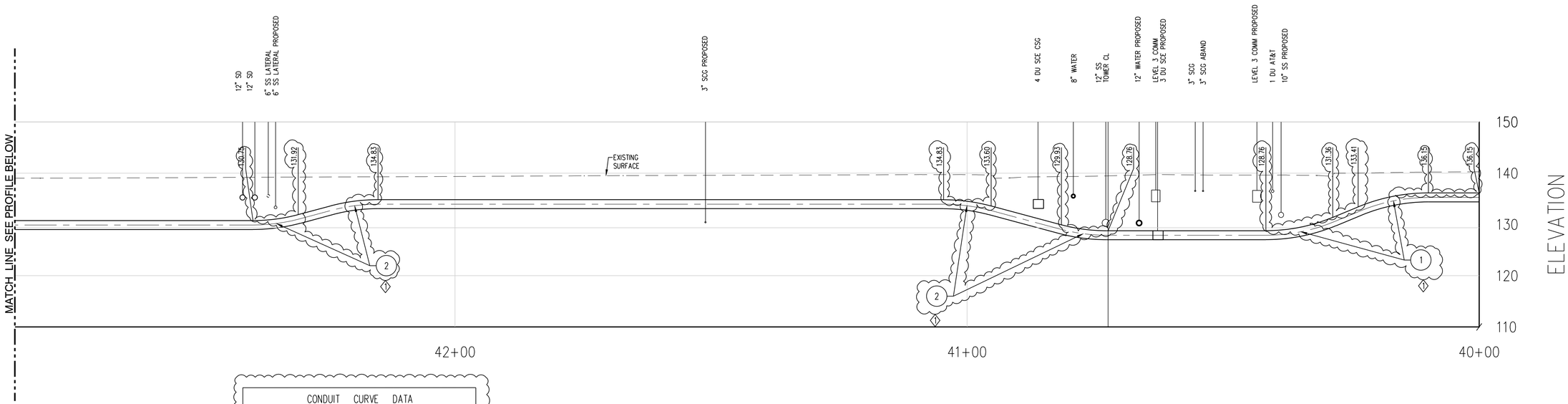

CONDUIT CURVE DATA 4-5" BETWEEN TOWER AND GALE					
○	△	R	L	T	C
1	22°30'00"	35.00'	13.75'	6.96'	13.66'
2	15°00'00"	35.00'	9.16'	4.61'	9.30'
3	15°00'00"	12.50'	3.27'	1.65'	3.26'

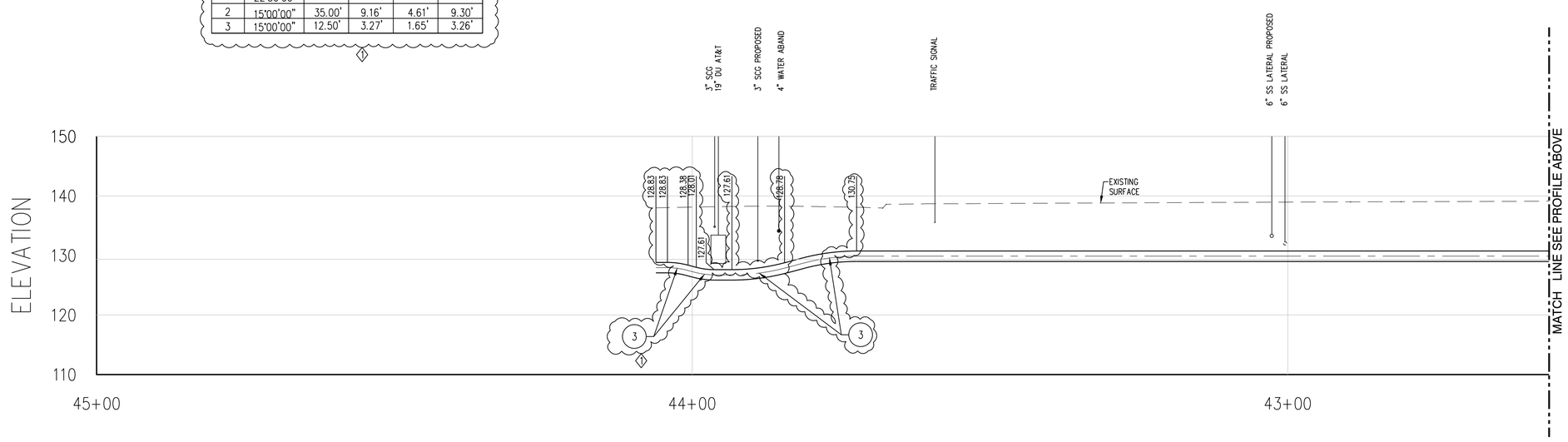

4-5" BETWEEN TOWER AND GALE

REV	DATE	BY	APP	REG NO	EXPIRES	SEAL HOLDER	DESCRIPTION
1	4/3/14			C64154	12/31/14	ZAFER MUDAR	AMENDMENT 3
0	2/21/14			C64154	12/31/14	ZAFER MUDAR	ISSUED FOR SOLICITATION

DESIGNED BY J. VARIAS
DRAWN BY R. NACION
CHECKED BY Z. MUDAR
IN CHARGE N. HUMBY
DATE 02/21/2014

REGISTERED PROFESSIONAL ENGINEER ZAFER MUDAR NO.C64154 Exp.12-31-14 CIVIL STATE OF CALIFORNIA

Metro
PARSONS BRINCKERHOFF

LOS ANGELES COUNTY
METROPOLITAN TRANSPORTATION AUTHORITY

777 SOUTH FIGUEROA STREET, 11TH FLOOR
LOS ANGELES, CA 90017

PREPARED UNDER THE SUPERVISION OF:

NAME: ZAFER MUDARS LIC. # C64154: EXPIRES 12/31/14 DATE

WESTSIDE SUBWAY EXTENSION
ADVANCED UTILITY RELOCATION

WILSHIRE BLVD – LA CIENEGA STATION
SCE – POWER RELOCATION PROFILES
SHEET 4 OF 5

CONTRACT NO C1056
DRAWING NO E-104 REV 1
SCALE 1" = 20'
SHEET NO 74

DWG filename: L:\LAWSBIM\WACBM\CADD\12_UTILITIES\CITYOFBH\SCE EDISON\C1056UE104P1.DWG Plot Date & Time: 4/2/2014 10:23:37 AM Plotted by: Nacion,Roque

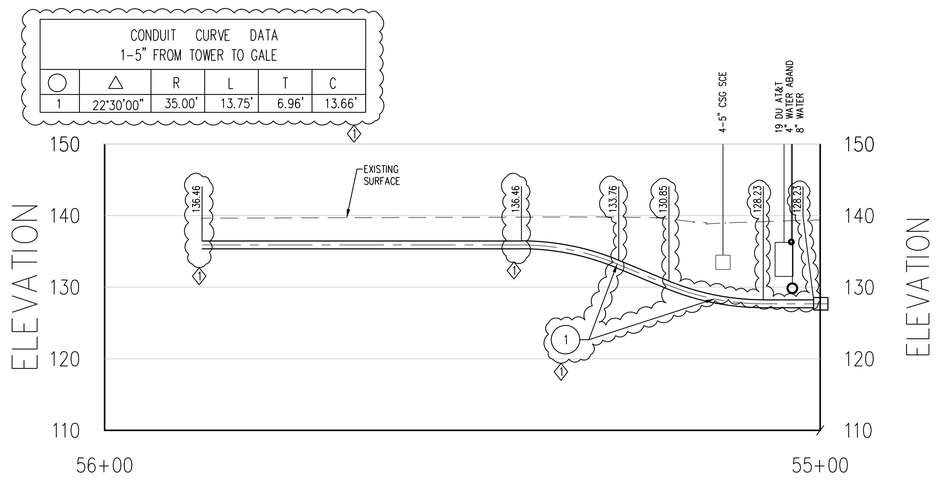

1-5" FROM TOWER DR TO GALE DR

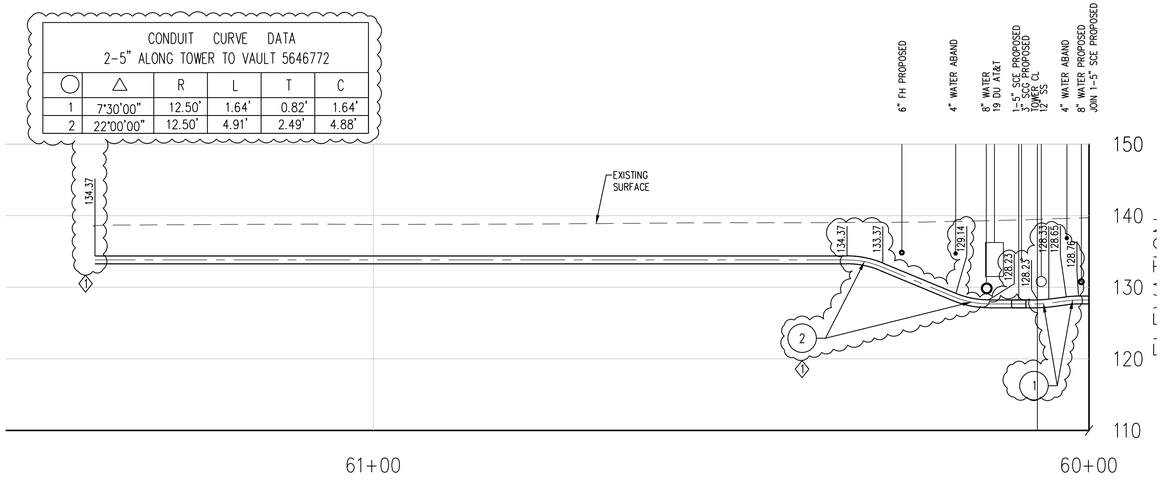

2-5" ALONG TOWER DR TO VAULT 5646

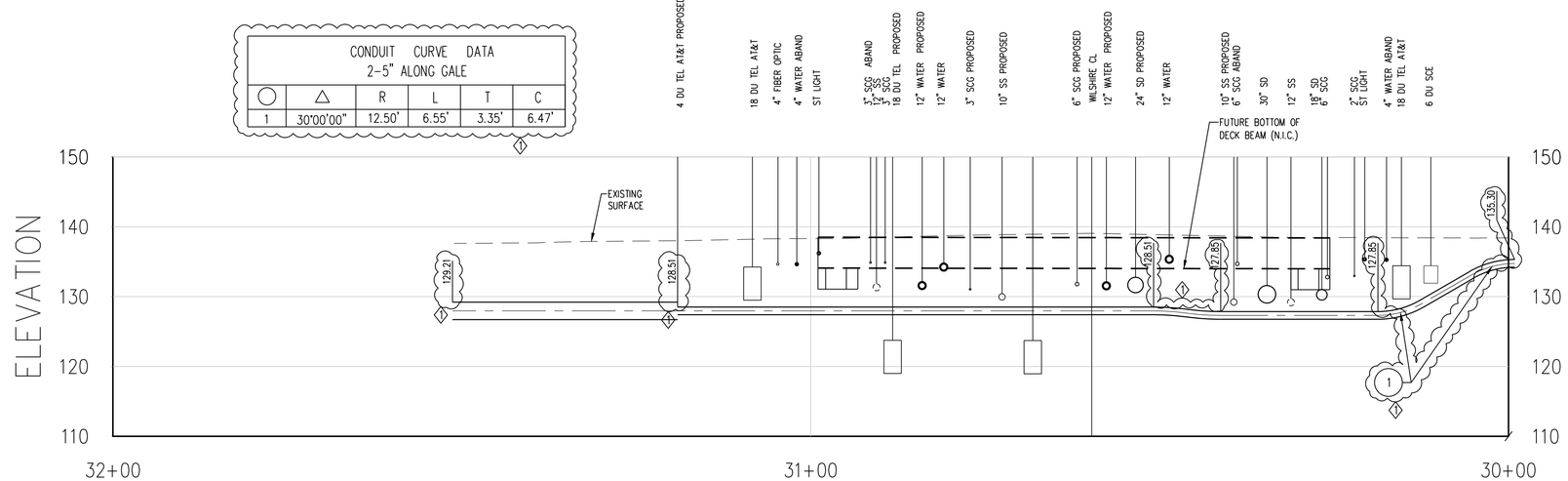

2-5" ALONG GALE DR

REV	DATE	BY	APP	REG NO	EXPIRES	SEAL HOLDER	DESCRIPTION
1	4/3/14			C64154	12/31/14	ZAFER MUDAR	AMENDMENT 3
0	2/21/14			C64154	12/31/14	ZAFER MUDAR	ISSUED FOR SOLICITATION

DESIGNED BY J. VARIAS
DRAWN BY R. NACION
CHECKED BY Z. MUDAR
IN CHARGE N. HUMBY
DATE 02/21/2014

REGISTERED PROFESSIONAL ENGINEER ZAFER MUDAR NO.C64154 Exp.12-31-14 CIVIL STATE OF CALIFORNIA

Metro

PARSONS BRINCKERHOFF

LOS ANGELES COUNTY
METROPOLITAN TRANSPORTATION AUTHORITY

777 SOUTH FIGUEROA STREET, 11TH FLOOR
LOS ANGELES, CA 90017

PREPARED UNDER THE SUPERVISION OF:

NAME: ZAFER MUDARS LIC. # C64154: EXPIRES 12/31/14 DATE

WESTSIDE SUBWAY EXTENSION
ADVANCED UTILITY RELOCATION

WILSHIRE BLVD – LA CIENEGA STATION
SCE – POWER RELOCATION PROFILES
SHEET 5 OF 5

CONTRACT NO C1056
DRAWING NO E-105 REV 1
SCALE 1" = 20'
SHEET NO 75

DWG filename: L:\LANGSBM\WACBM\CADD\12_UTILITIES\CITYOFBH\SCE EDISON\C1056UE105P1.DWG Plot Date & Time: 4/2/2014 10:23:42 AM Plotted by: Nacion,Roque

HORIZONTAL AND VERTICAL LOCATIONS TO BE VERIFIED IN THE FIELD AND ENGINEER NOTIFIED OF ANY DISCREPANCIES PRIOR TO CONSTRUCTION.

ABBREVIATIONS:

BH =CITY OF BEVERLY HILLS
EX =EXISTING
N.I.C. =NOT IN CONTRACT
PROP =PROPOSED

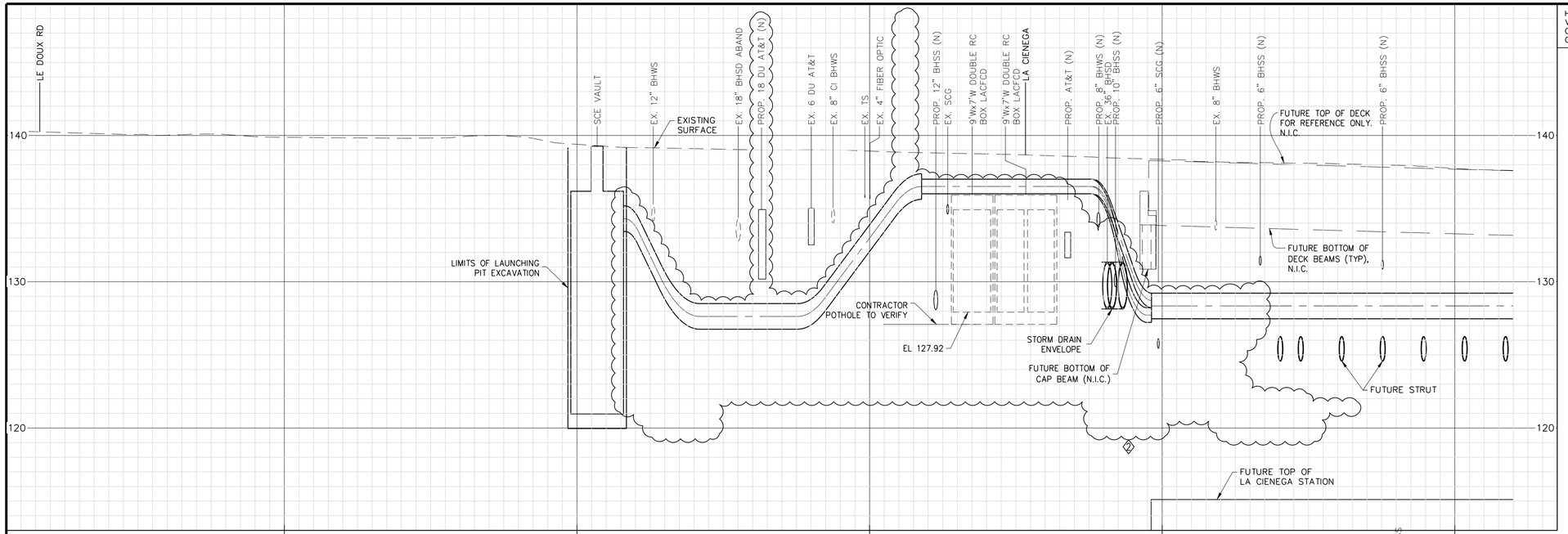

TYPICAL DUCTBANK LAYOUT
OVER EXISTING LAFCD BOX CULVERT

1

2

WILSHIRE BOULEVARD-NORTH

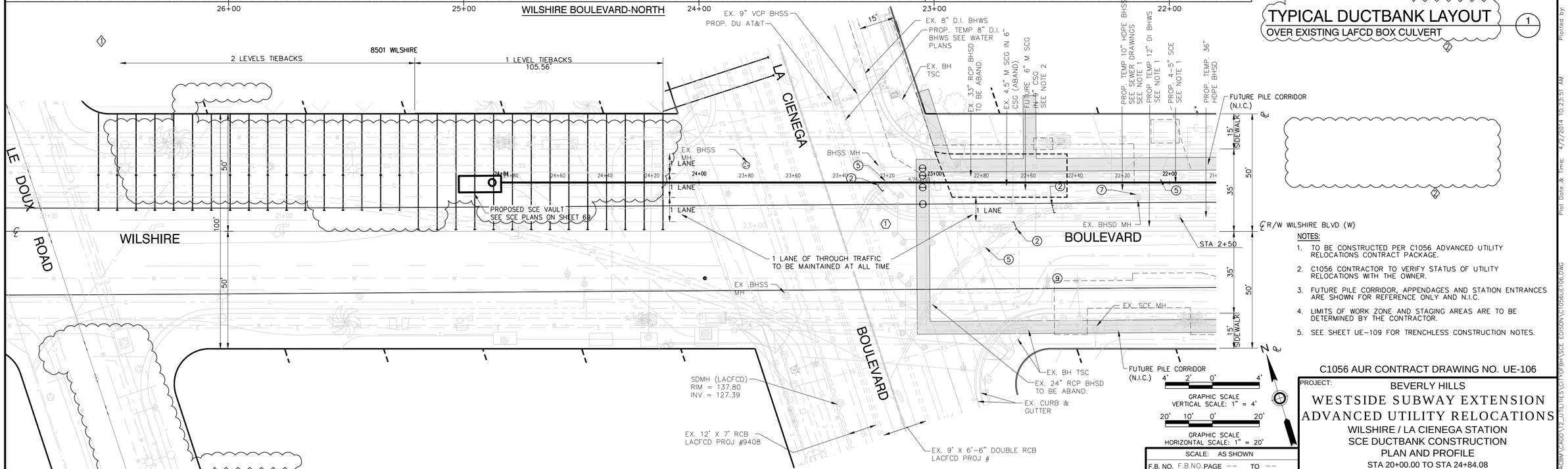

NOTES:

1. TO BE CONSTRUCTED PER C1056 ADVANCED UTILITY RELOCATIONS CONTRACT PACKAGE.
2. C1056 CONTRACTOR TO VERIFY STATUS OF UTILITY RELOCATIONS WITH THE OWNER.
3. FUTURE PILE CORRIDOR, APPENDAGES AND STATION ENTRANCES ARE SHOWN FOR REFERENCE ONLY AND N.I.C.
4. LIMITS OF WORK ZONE AND STAGING AREAS ARE TO BE DETERMINED BY THE CONTRACTOR.
5. SEE SHEET UE-109 FOR TRENCHLESS CONSTRUCTION NOTES.

DATUMS:

THE BASIS OF HORIZONTAL CONTROL FOR THIS PROJECT IS THE CALIFORNIA COORDINATE SYSTEM NAD83 ZONE 5 (2007.0 EPOCH) DETERMINED LOCALLY BY THE FOLLOWING NGS POINTS: EW9587, EW9595 AND AA9327

ELEVATIONS ARE BASED ON THE NAVD 1988 – SPECIFICALLY CITY OF LOS ANGELES BENCHMARKS 12-16091, 13-13450 AND 13-13352 (2000 ADJ)

C1056 AUR CONTRACT DRAWING NO. UE-106

PROJECT:
BEVERLY HILLS
WESTSIDE SUBWAY EXTENSION ADVANCED UTILITY RELOCATIONS
WILSHIRE / LA CIENEGA STATION
SCE DUCTBANK CONSTRUCTION
PLAN AND PROFILE
STA 20+00.00 TO STA 24+84.08

Metro
LOS ANGELES COUNTY METROPOLITAN TRANSPORTATION AUTHORITY
777 SOUTH FIGUEROA ST. 11TH FLOOR
LOS ANGELES, CA 90017
PREPARED UNDER THE SUPERVISION OF:
NAME: ZAFER MUDAR LIC. # C64154; EXPIRES 12/31/14 DATE

PARSONS BRINCKERHOFF

REGISTERED PROFESSIONAL ENGINEER ZAFER MUDAR No. C64154 EXPIRES: 12/31/2014 CIVIL STATE OF CALIFORNIA

SCALE:	AS SHOWN
F.B. NO.	F.B.NO.PAGE -- TO --
DESIGNED	F. FONG DATE 02/21/14
DRAWN	R. NACION DATE 02/21/14
CHECKED	Z. MUDAR DATE 02/21/14

DATE	DESCRIPTION	BY	REV
4/3/14	AMENDMENT 3	ZM	2
2/21/14	AMENDMENT 1	ZM	1
2/21/14	ISSUED FOR SOLICITATION	ZM	0

SUBMITTED _____ DATE _____
APPROVED _____ DATE _____
CITY ENGINEER

JOB NO. 1335
DRAWING NO. 7443
SHEET 76 OF 172 SHEET

CITY OF BEVERLY HILLS, CALIFORNIA
CIVIL ENGINEERING DEPARTMENT

Plotted by: Nacion,Rocque
Plot Date & time: 4/2/2014 10:23:51 AM
WG Filename: L:\LAWRSM\WAC\BAY\12_UTILITIES\UTIL\OFBH\SCE EDISON\C1056UE106.DWG

CITY OF BEVERLY HILLS WORKSITE TRAFFIC CONTROL NOTES:

1. THESE STAGES OF WORK ARE FOR THE SOUTHERN CALIFORNIA EDISON POWER LINE FOR WESTSIDE SUBWAY EXTENSION PROJECT, AT LA CIENEGA STATION.
2. EXPECTED IMPLEMENTATION DATE IS XX, 20XX FOR THE DURATION OF X MONTHS.
3. THE CONTRACTOR SHALL BE RESPONSIBLE FOR LABOR AND MATERIAL INVOLVED IN THE REMOVAL, INSTALLATION, AND MAINTENANCE OF ALL STRIPING, PAVEMENT MARKINGS, SIGNING, BARRICADING, DELINEATORS, ETC SHOWN ON THESE PLANS AND AS CONSTRUCTION STAGING NECESSITATES.
4. CONTRACTOR SHALL NOTIFY THE DEPARTMENT OF PUBLIC WORKS 14 DAYS PRIOR TO THE BEGINNING OF WORK AT (310) 285–2521.
5. WORK SHALL STOP WHEN FOG IS PRESENT (VISIBILITY OF LESS THAN ONE–HALF MILE) AND WHEN THE STREET IS WET.
6. CONSTRUCTION OF WORK SHALL BE COORDINATED IN SUCH A MANNER THAT NO TWO ADJACENT INTERSECTIONS ARE CLOSED AT ANY GIVEN TIME.
7. THE REVIEW OF THIS PLAN BY THE CITY OF BEVERLY HILLS, OR ITS AGENTS, IS FOR MINIMUM COMPLIANCE WITH THE REQUIREMENTS AS REFERENCED AND APPROVAL DOES NOT RELIEVE THE APPLICANT FROM THE RESPONSIBILITY FOR THE CORRECTION OF ERRORS, AND/OR OMISSIONS OF TRAFFIC CONTROL SHOWN HEREON. UPON REQUEST, THE REQUIRED ADDITIONS, REVISIONS, ETC. SHALL BE PROMPTLY SUBMITTED TO THE CITY ENGINEER FOR APPROVAL. ONCE IMPLEMENTED AT THE SITE LOCATION, ADDITIONAL TRAFFIC CONTROL DEVICES, MEASURES, ETC MAY BE REQUIRED AS DEEMED NECESSARY BY THE CITY ENGINEER TO IMPROVE SAFETY, TRAFFIC FLOW, AND MINIMIZE INCONVENIENCE TO RESIDENTS AND THE TRAVELING PUBLIC.
8. CONTRACTOR SHALL MAINTAIN AT LEAST ONE ACCESS POINT FOR THE VEHICULAR ACCESS TO ALL PROPERTIES, EXCEPT WITH PRIOR WRITTEN AUTHORIZATION FROM THE CITY TRAFFIC ENGINEER AND PROPERTY OWNER.
9. ALL CONSTRUCTION RELATED WARNING SIGNS SHALL BE IN BLACK LEGEND WITH ORANGE BACKGROUND AND IN CONFORMANCE WITH THE CALIFORNIA MUTCD (2012) EDITION.
10. CONTRACTOR SHALL NOTIFY METRO AT (213) 922–4632 OR ANY OTHER AFFECTED TRANSIT SERVICES AT LEAST FIVE (5) WORKING DAYS PRIOR TO CONSTRUCTION.
11. ALL TRAFFIC CONTROL DEVICES SHALL BE KEPT IN THEIR PROPER POSITION AT ALL TIMES, AND SHALL BE REPAIRED, REPLACED OR CLEANED AS NECESSARY TO PRESERVE THEIR APPEARANCE, EFFECTIVENESS, AND CONTINUITY.
12. CONTRACTOR SHALL PROVIDE FLAGGERS AS DEEMED NECESSARY BY CITY. A FLAGGER SHALL USE THE APPROVED OCTAGONAL STOP/SLOW PADDLE, SHALL WEAR YELLOW TYPE III SAFETY VEST (PADDLE AND VEST MUST BE REFLECTORIZED FOR NIGHT WORK) AND HARD HAT, AS REQUIRED BY THE WATCH MANUAL, AND MUST BE PROPERLY TRAINED BY THE CONTRACTOR PERFORMING THE WORK SAFELY. APPROPRIATE ADVANCE SIGNS MUST ALSO BE INSTALLED, PER THE WATCH MANUAL.
13. ALL TEMPORARY TRAFFIC CONTROL DEVICES SHALL BE REMOVED FOLLOWING COMPLETION OF EACH CONSTRUCTION STAGE AND THE PERMANENT TRAFFIC CONTROL DEVICES SHALL BE RESTORED BY THE CONTRACTOR UPON REMOVAL.
14. ALL SIGNS, DELINEATORS, BARRICADES, ETC., SHALL CONFORM TO THE STATE OF CALIFORNIA STANDARD SPECIFICATIONS LATEST EDITION, "2012 MUTCD WITH CALIFORNIA SUPPLEMENT," AND 2012 WATCH MANUAL.
15. CONTRACTOR SHALL CONTACT THE CITY TRAFFIC ENGINEER TO COORDINATE ALL ADJUSTMENTS TO TRAFFIC SIGNALS AS SHOWN ON THIS PLAN. APPLICANTS BEAR ALL COSTS FOR NECESSARY ADJUSTMENTS.
16. THERE SHALL BE NO STORAGE OF CONSTRUCTION MATERIALS OR EQUIPMENT OUTSIDE THE DESIGNATED WORK AREA AS INDICATED IN THE WTCP. STORAGE OF CONSTRUCTION MATERIALS OR EQUIPMENT WITHIN THE DESIGNATED AREA SHALL BE DONE IN A MANNER NOT TO CREATE VISIBILITY OBSTRUCTIONS TO THE MOTORING PUBLIC.
17. CONTRACTOR SHALL MAINTAIN ACCESS TO ALL DRIVEWAYS AT ALL TIMES AND SHALL COORDINATE WITH RESIDENTS/BUSINESSES ANY CLOSURE/LIMITED ACCESS TO THEIR DRIVEWAYS.
18. CONTRACTOR SHALL PERFORM WORK IN ONLY ONE STAGE AT A TIME. THE CONTRACTOR SHALL ONLY UTILIZE THAT PORTION OF THE DESIGNATED "WORK AREA" WHICH IS NEEDED FOR CONSTRUCTION AT ANY GIVEN TIME.
19. THE CROSSWALKS ACROSS THREE LEGS OF ANY SIGNALIZED INTERSECTION SHALL BE MAINTAINED AT ALL TIMES. "NO PED CROSSING" (R9–3/R9–3bP) SIGNS SHALL BE INSTALLED WHEN A PAINTED CROSSWALK IS UNAVAILABLE FOR USE DUE TO CONSTRUCTION. PEDESTRIAN SIGNAL INDICATIONS FOR THE CLOSED CROSSWALK SHALL BE COVERED PER WATCH MANUAL (SECTION 6–2).
20. CONTRACTOR SHALL INSTALL R3–18 (NO LEFT AND NO U–TURN) SIGNS AT INTERSECTIONS WHERE THE LEFT TURN LANE HAS BEEN CLOSED FOR CONSTRUCTION. SIGNS SHOULD BE INSTALLED ON MAST ARMS AND FAR LEFT OF THE INTERSECTION OR AT LOCATIONS WHERE THEY WILL BE CLEARLY VISIBLE BY THE THRU TRAFFIC.
21. FOR OTHER REQUIREMENTS RELATED TO TRAFFIC CONTROL PLANS AND WORK AREA MAINTENANCE, THE CONTRACTOR SHALL FOLLOW THE MANUAL ON UNIFORM TRAFFIC CONTROL DEVICES (MUTCD) 2012 EDITION, CALIFORNIA SUPPLEMENT "WORK AREA TRAFFIC CONTROL HANDBOOK" (WATCH MANUAL) LATEST EDITION, AND ALL RELATED SECTIONS OF THE STANDARD SPECIFICATIONS FOR PUBLIC WORKS CONSTRUCTION.
22. CONTRACTOR SHALL PROVIDE CHANGEABLE MESSAGE SIGNS AS FIELD CONDITIONS/DETOURS WARRANT AND AS DEEMED NECESSARY BY THE CITY. EVEN IF THEY ARE NOT SHOWN ON THESE PLANS.
23. ALL TEMPORARY SIGNAGE INSTALLED ADJACENT TO PEDESTRIAN TRAVEL WAY MUST ALLOW FOR ADA–COMPLIANT PASSAGEWAYS.
24. THE CONTRACTOR SHALL BE RESPONSIBLE FOR STRIPING (PROPOSED AND EXISTING) SHOWN ON THIS WTCP TO BE IN GOOD CONDITION AND VISIBLE. THE CONTRACTOR SHALL REPAINT ANY FADED EXISTING STRIPING AS DIRECTED BY THE CITY.
25. THE CONTRACTOR SHALL BE RESPONSIBLE FOR REPLACING ANY MISSING OR DAMAGED SIGNS (DUE TO CONSTRUCTION).
26. THESE PLANS ARE PROVIDED FOR USE BY THE CONTRACTOR, HOWEVER THE CONTRACTOR MAY ADD TO AND/OR CHANGE THE TRAFFIC CONTROL APPROACH (INCLUDING ANY ADDITIONAL TRAFFIC CONTROL PLANS) TO SUIT THEIR WORKING METHODS. ANY CHANGES TO WORK AREAS, WORK HOURS, AND/OR APPROVED PLANS SHALL BE SIGNED BY A LICENSED TRAFFIC ENGINEER. ANY SUCH CHANGES AND/OR ADDITIONS INCLUDING ANY REQUIRED APPROVALS SHALL BE AT NO EXTRA COST TO METRO.

CITY OF LOS ANGELES WORKSITE TRAFFIC CONTROL NOTES:

1. THE CONTRACTOR SHALL PROVIDE WRITTEN NOTIFICATION TO THE LADOT TEMPORARY TRAFFIC MANAGEMENT SECTION AT (213) 972–5968 (PHONE) / DON.SCHIMA@LACITY.ORG (EMAIL) AT LEAST FIVE (5) WORKING DAYS PRIOR TO CONSTRUCTION WITH THE DATE(S) OF IMPLEMENTATION & TYPE OF TEMPORARY TRAFFIC CONTROL IMPLEMENTATION (INCLUDE ACCEPTANCE DATE ON PLAN & SHEET NUMBER) & BRIEF DESCRIPTION OF WORK. DEPARTMENT OF TRANSPORTATION RESERVES THE RIGHT TO OBSERVE THESE CONTROL PLANS IN USE AND TO MAKE NECESSARY CHANGES AS FIELD CONDITIONS WARRANT. ANY CHANGES SHALL SUPERSEDE THESE PLANS. THE CONTRACTOR SHALL BE RESPONSIBLE FOR THE PLACEMENT OF ANY ADDITIONAL TRAFFIC CONTROL DEVICES NECESSARY TO ENSURE PUBLIC SAFETY AT ALL TIMES DURING CONSTRUCTION.
2. CONTRACTOR SHALL NOTIFY LADOT'S SIGNAL MAINTENANCE SUPERVISOR AT (213) 485–7721 FIVE (5) WORKING DAYS PRIOR TO ANY EXCAVATION OR CONSTRUCTION WITHIN 10–FEET OF EXISTING TRAFFIC SIGNAL DETECTOR LOOPS, CONDUIT, INTERCONNECT, OR ATSAC FIBER OPTIC CABLE.
3. ANY DAMAGE TO TRAFFIC SIGNAL DETECTOR LOOPS, CONDUITS, INTERCONNECT, OR FIBER OPTIC CABLE SHALL BE REPAIRED IMMEDIATELY BY A QUALIFIED CONTRACTOR AT THE CONTRACTOR'S OWN EXPENSE. LADOT HAS THE OPTION TO DO THE REPAIR AND BILL THE CONTRACTOR. DELAYS IN REPAIR OF INTERCONNECT OR ATSAC FIBER OPTIC CABLE WILL REQUIRE THE PAYMENT OF LIQUIDATION DAMAGE TO THE CITY OF LOS ANGELES DEPARTMENT OF TRANSPORTATION. IMMEDIATELY NOTIFY LADOT SIGNAL REPAIR PERSONNEL AT (213) 485–7721 OF ANY DAMAGES.
4. FOR WTCP IMPLEMENTATION DURATION OF LESS THAN ONE (1) MONTH, THE CONTRACTOR SHALL CONTACT THE LADOT SPECIAL TRAFFIC CONTROLS OFFICE AT (213) 485–2298 AT LEAST FIVE (5) WORKING DAYS IN ADVANCE OF EACH NEW CONSTRUCTION STAGE FOR THE INSTALLATION OF TEMPORARY "TOW AWAY NO STOPPING ANY TIME" SIGNS. INSTALLATION OF THE TEMPORARY "TOW AWAY NO STOPPING ANY TIME" SIGNS AT PARKING METER ZONES SHALL ALSO INCLUDE COVERING METER HEADS AND THE ASSOCIATED PARKING RESTRICTION. FOR WTCP IMPLEMENTATION DURATION OF MORE THAN ONE (1) MONTH, THE CONTRACTOR SHALL FURNISH AND INSTALL "TOW AWAY NO STOPPING ANY TIME" SIGNS PER CITY SPECIFICATION (METAL AND REFLECTORIZED). CONTACT LADOT TEMPORARY TRAFFIC MANAGEMENT ENGINEER FOR SAMPLES.
5. NOTIFY FILM LA (JOSH MINGO) AT (213) 977–8600 AT LEAST FIVE (5) WORKING DAYS PRIOR TO CONSTRUCTION TO COORDINATE WITH FILMING ACTIVITIES.
6. THE CITY OF LOS ANGELES (LADOT) HAS JURISDICTION FOR STRIPING/TRAFFIC CONTROL DEVICES WITHIN CITY RIGHT OF WAY.

LEGEND:

1. – EXISTING STRIPING & MARKINGS TO REMAIN
   – EXISTING STRIPING & MARKINGS TO BE REMOVED
   – PROPOSED STRIPING & MARKINGS
2. R/C – EXISTING RED CURB MARKINGS TO REMAIN
   R/C – EXISTING RED CURB MARKINGS TO BE REMOVED
   R/C – PROPOSED RED CURB MARKINGS
3. – EXISTING SIGN AND POST
   – EXISTING SIGN AND POST TO BE REMOVED OR RELOCATED
   – PROPOSED SIGN AND POST
4. S – SIGNALIZED INTERSECTION
5. – PROPOSED TYPE II BARRICADE / WITH SIGN(S)
6. – EXISTING TYPE II BARRICADE / WITH SIGN(S) TO BE REMOVED
7. – PROPOSED TYPE III BARRICADE / WITH SIGN(S)
8. – EXISTING TYPE III BARRICADE / WITH SIGN(S) TO BE REMOVED
9. – PROPOSED WORK AREA
10. – PROPOSED 30" EPOXIED SURFACE MOUNT DELINEATORS WITH REFLECTIVE SHEETING (SPACED AT 20 FEET)
11. – PROPOSED FENCE
12. – PORTABLE CHANGEABLE MESSAGE SIGN
13. – PROPOSED FLASHING ARROW BOARD
14. – PROPOSED BLACK DETOUR TAPE TO COVER CONFLICTING STRIPING MARKINGS
15. – PROPOSED 24" TRAFFIC CONE WITH RETROREFLECTIVE SLEEVE

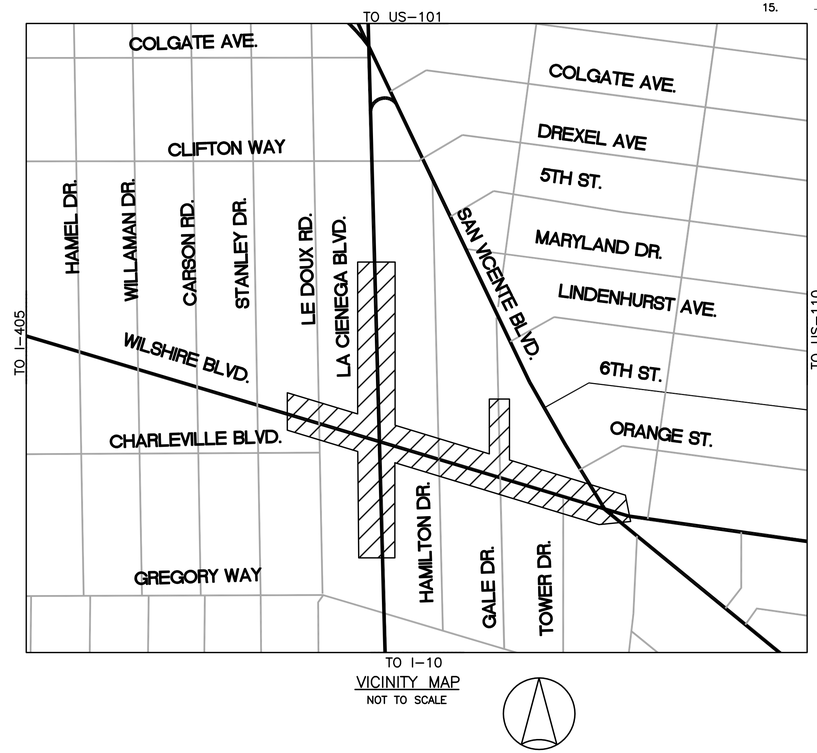

VICINITY MAP
NOT TO SCALE

LA CIENEGA STATION – TC–SCE–01

DRAWN BY:

V&A INC.
530 S. HEWITT ST. SUITE 121
LOS ANGELES, CA 90013
213.972.9700

PARSONS BRINCKERHOFF
777 SOUTH FIGUEROA ST. 11TH FLOOR
LOS ANGELES, CA 90017

DIGALERT
CALL TOLL FREE
1–800–227–2600
2 Working Days Before You Dig

REGISTERED PROFESSIONAL ENGINEER – PEDRO DANILO R. PERRY – No. C56121 – Exp. 06/30/14 – CIVIL – STATE OF CALIFORNIA
STAMP

REVISIONS

D CITY OF BEVERLY HILLS
ENGINEERING DEPARTMENT

DESIGNED BY	DRAWN BY	CHECKED BY	APPROVED BY
VH	VH	MG II	

SUBMITTED BY RCE No.
REVIEWED BY
ASSISTANT CITY ENGINEER DATE
ENGINEER DATE

Traffic Control:
WESTSIDE SUBWAY EXTENSION PROJECT
ADVANCED UTILITY RELOCATION
LA CIENEGA STATION
SCE
NOTES AND LEGEND

P.O No.
CIP No.
PROJECT No.
SHEET NO 1 OF 27

CADD PROJECT FILE NAME: P:\Westside Subway Extension\Design\Base\La Cienega\TC-SCE-01 La Cienega Station Title Sheet.dwg Apr 01, 2014 3:47pm_vEncarnacion

END ROAD WORK G20-2

ONLY R3-5(RT)

R3-18 30" x 30"

W1-7 48" x 24"

LEFT LANE MUST TURN LEFT R3-7(LT) 36" x 36"

TURNING VEHICLES YIELD TO R10-15

W1-6(LT)

W1-6(RT) 48" x 24"

W12-1 36" x 36"

ROAD WORK AHEAD W20-1 36" x 36"

RIGHT LANE CLOSED AHEAD C20(CA)(RT) 36" x 36"

TYPE III(CA)/III(CA) (ORANGE) 18" x 18"

KEEP RIGHT R4-7a

W6-3

NO TURNS R3-3

LANE CLOSED C30 (CA)

W24-1(LT)

ADDITIONAL NOTES:

1. REFER TO SHEET 1 FOR REQUIREMENTS REGARDING NOTIFICATION OF APPROPRIATE CITY AGENCIES.
2. THIS STAGE OF WORK WILL BE IMPLEMENTED BETWEEN THE HOURS OF 8PM TO 6AM (MONDAY TO FRIDAY) NIGHTLY FOR THE DURATION OF X DAYS (THE DURATION GIVEN FOR EACH STAGE IS PROVISIONAL AND MAY BE ADJUSTED BY THE CONTRACTOR FOLLOWING THEIR DETAILED CONSTRUCTION PLANNING AND THE AGREEMENT OF CITY OF BEVERLY HILLS). NOISE CAUSING ACTIVITIES TO CEASE AT 11PM.
3. DURING NON-WORKING HOURS, CONTRACTOR SHALL RESTORE CONDITIONS THAT WERE EXISTING PRIOR TO START OF THIS STAGE OF CONSTRUCTION. INCLUDING REMOVE CONES AND BARRICADES, COVER/UNCOVER SIGNS, AND STEEL PLATE ANY OPEN TRENCHES.
4. CONTRACTOR SHALL MAINTAIN ACCESS TO DRIVEWAYS AND LOCAL ACCESS TO RESIDENTS AT ALL TIMES.
5. CONTRACTOR SHALL PROTECT TRAFFIC SIGNAL DETECTOR LOOPS, BUS LOOPS, CONDUITS, INTERCONNECT, AND FIBER OPTIC CABLE. IF DAMAGED THESE SHALL BE REPAIRED IMMEDIATELY BY A QUALIFIED CONTRACTOR AT THE CONTRACTOR'S OWN EXPENSE.
6. BUS STOPS WILL BE RELOCATED AT THE RESPONSIBILITY OF MTA PRIOR TO CONSTRUCTION.

ADDITIONAL NOTES (CONT'D):

7 CONTRACTOR SHALL MAINTAIN VISIBILITY TO ALL SIGNAL HEAD INDICATIONS BY KEEPING CONSTRUCTION EQUIPMENT BELOW THE STANDARD HEIGHT AND OUT OF THE CONE OF VISION FOR SIGNAL HEAD INDICATIONS.

8 CONTRACTOR SHALL COVER EXISTING CONFLICTING STRIPING/PAVEMENT MARKING WITH BLACK TRAFFIC TAPE.

9 CONTRACTOR SHALL COVER NB, EB, AND WB LEFT TURN ARROW HEADS WITH DETACHABLE HEAD COVER AND DE-ENERGIZE AS DIRECTED BY TRAFFIC SIGNAL INSPECTORS.

10 CONTRACTOR SHALL MAINTAIN 5' MINIMUM ADA-COMPLIANT CROSSWALK/ WALKWAY.

ADDITIONAL NOTES (CONT'D):

11 CONTRACTOR SHALL COVER NB, EB, AND WB LEFT TURN ARROW HEADS WITH DETACHABLE HEAD COVER AND DE-ENERGIZE AS DIRECTED BY TRAFFIC SIGNAL INSPECTORS.

12 CONTRACTOR SHALL MAINTAIN 6' SIDEWALK FOR PEDESTRIAN AND INSTALL FENCE ALONG THE PROPOSED SIDEWALK.

13 CONTRACTOR SHALL COORDINATE WITH THE CITY OF BEVERLY HILLS 14 DAYS IN ADVANCE OF IMPLEMENTATION TO DETERMINE THE NEED FOR FLASHING RED TRAFFIC SIGNAL OPERATION AND/OR TRAFFIC CONTROL OFFICERS.

LEFT TURN CLOSED AT LA CIENEGA

DETAIL "K"
TO BE IN OPERATION DURING CLOSURE

LEFT TURN CLOSED AT WILSHIRE BLVD

DETAIL "L"
TO BE IN OPERATION DURING CLOSURE

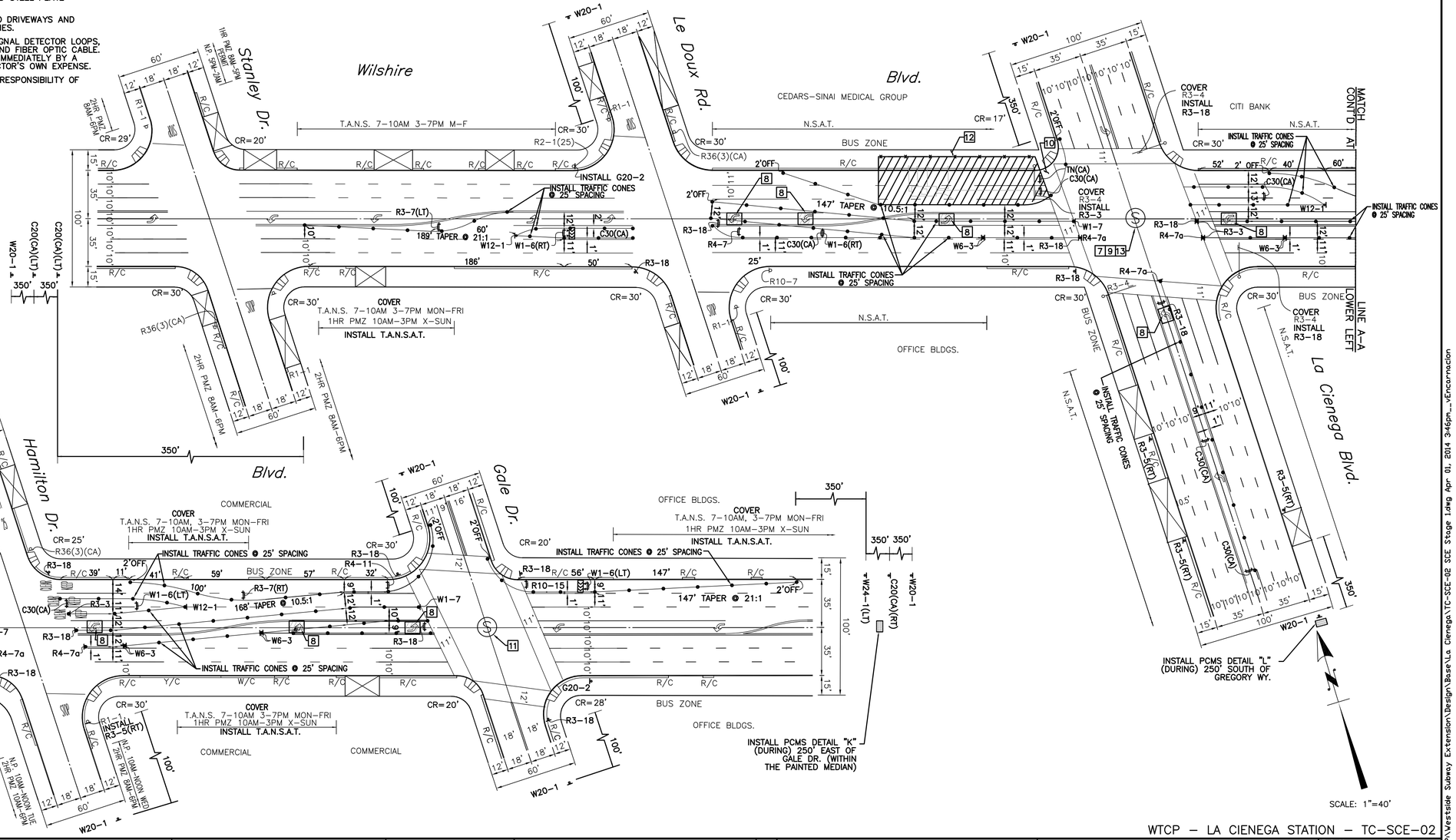

WTCP - LA CIENEGA STATION - TC-SCE-02

DRAWN BY:

V&A INC.
530 S. HEWITT ST. SUITE 121
LOS ANGELES, CA 90013
213.972.9700

PARSONS BRINCKERHOFF
777 SOUTH FIGUEROA ST. 11TH FLOOR
LOS ANGELES, CA 90017

DIGALERT
CALL TOLL FREE
1-800-227-2600
2 Working Days Before You Dig

REGISTERED PROFESSIONAL ENGINEER PEDRO DANILO R. PEZON No. C56181 Exp. 06/30/14 CIVIL STATE OF CALIFORNIA
STAMP

REVISIONS

D CITY OF BEVERLY HILLS
ENGINEERING DEPARTMENT

DESIGNED BY	DRAWN BY	CHECKED BY	APPROVED BY
VH	VE	MG II	

SUBMITTED BY RCE No.
REVIEWED BY
ASSISTANT CITY ENGINEER DATE
ENGINEER DATE

Traffic Control:

WESTSIDE SUBWAY EXTENSION PROJECT
ADVANCED UTILITY RELOCATION
LA CIENEGA STATION
SCE STAGE 1

P.O No.
CIP No.
PROJECT No.
SHEET NO 2 OF 27

CADD PROJECT FILE NAME: P:\Westside Subway Extension\Design\Base\La Cienega\TC-SCE-02 SCE Stage 1.dwg Apr 01, 2014 3:46pm_...vEncarnacion

END ROAD WORK

G20-2

R3-18 30" x 30"

LEFT LANE MUST TURN LEFT

R3-7(LT) 36" x 36"

W1-6(LT)

W1-6(RT) 48" x 24"

W12-1 36" x 36"

ROAD WORK AHEAD

W20-1 36" x 36"

LEFT LANE CLOSED AHEAD

C20(CA)(LT) 36" x 36"

CENTER LANE CLOSED AHEAD

C20(CA)(CT) 36" x 36"

TYPE N(CA)TN(CA) (ORANGE) 18" x 18"

LANE CLOSED

C30 (CA) 36" x 36"

R4-7 36" x 45"

KEEP RIGHT

R4-7a

W6-3

NO TURNS

R3-3

ONLY

R3-5(RT)

MAY USE FULL LANE

R4-11

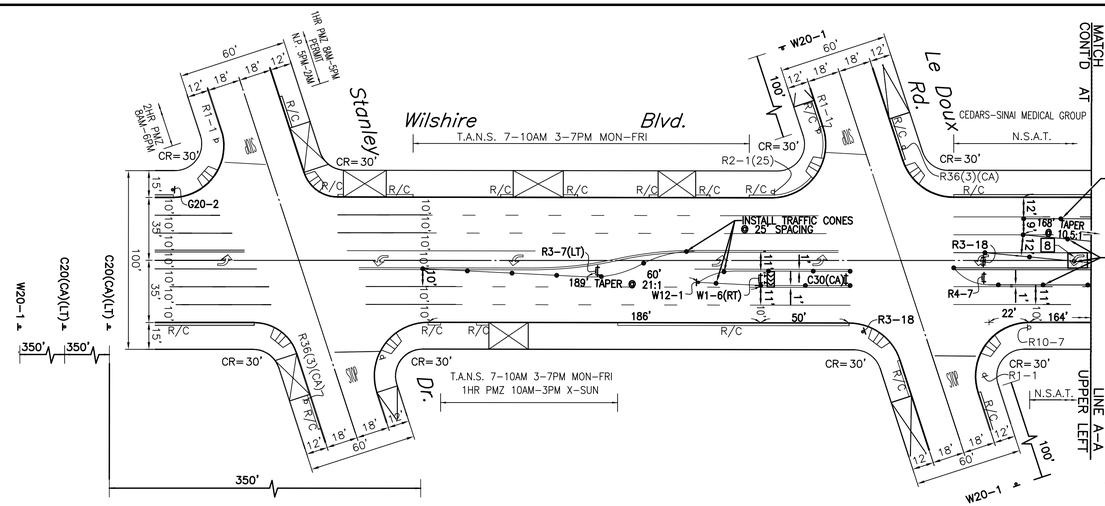

WILSHIRE WILL BE REDUCED TO ONE LANE XX/XX - XX/XX (TIME)

DETAIL "A"
TO BE IN OPERATION ONE WEEK PRIOR TO CLOSURE

ONE LANE AHEAD EXPECT DELAYS USE ALT ROUTE

DETAIL "B"
TO BE IN OPERATION DURING CLOSURE

LEFT TURN CLOSED AT LA CIENEGA

DETAIL "K"
TO BE IN OPERATION DURING CLOSURE

LEFT TURN CLOSED AT WILSHIRE BLVD

DETAIL "L"
TO BE IN OPERATION DURING CLOSURE

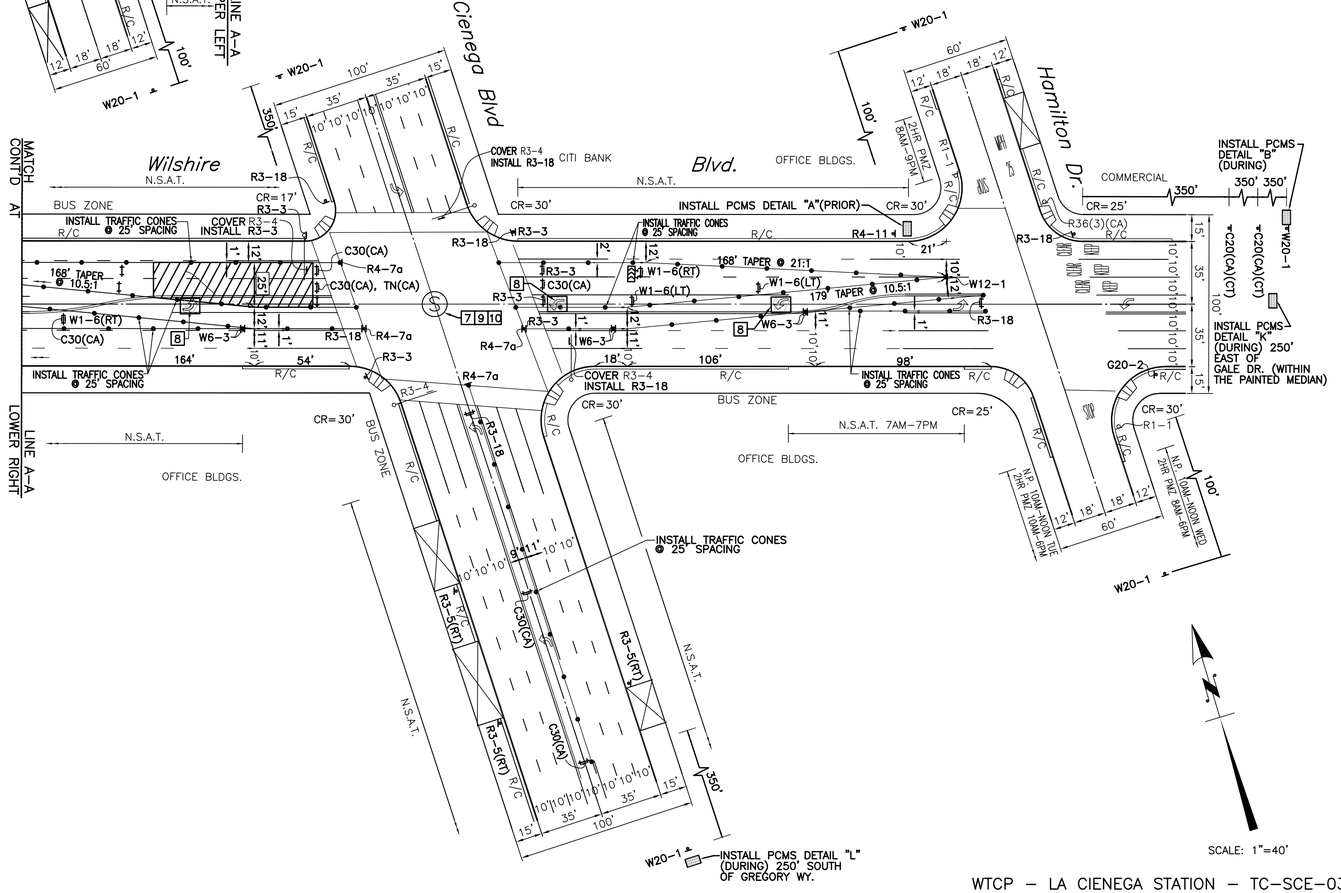

ADDITIONAL NOTES:

1. REFER TO SHEET 1 FOR REQUIREMENTS REGARDING NOTIFICATION OF APPROPRIATE CITY AGENCIES.
2. THIS STAGE OF WORK WILL BE IMPLEMENTED BETWEEN THE HOURS OF 8PM TO 6AM (MONDAY TO FRIDAY) NIGHTLY FOR THE DURATION OF X DAYS (THE DURATION GIVEN FOR EACH STAGE IS PROVISIONAL AND MAY BE ADJUSTED BY THE CONTRACTOR FOLLOWING THEIR DETAILED CONSTRUCTION PLANNING AND THE AGREEMENT OF CITY OF BEVERLY HILLS). NOISE CAUSING ACTIVITIES TO CEASE AT 11PM.
3. DURING NON–WORKING HOURS, CONTRACTOR SHALL RESTORE CONDITIONS THAT WERE EXISTING PRIOR TO START OF THIS STAGE OF CONSTRUCTION. INCLUDING REMOVE CONES AND BARRICADES, COVER/UNCOVER SIGNS, AND STEEL PLATE ANY OPEN TRENCHES.
4. CONTRACTOR SHALL MAINTAIN ACCESS TO DRIVEWAYS AND LOCAL ACCESS TO RESIDENTS AT ALL TIMES.
5. CONTRACTOR SHALL PROTECT TRAFFIC SIGNAL DETECTOR LOOPS, BUS LOOPS, CONDUITS, INTERCONNECT, AND FIBER OPTIC CABLE. IF DAMAGED THESE SHALL BE REPAIRED IMMEDIATELY BY A QUALIFIED CONTRACTOR AT THE CONTRACTOR'S OWN EXPENSE.
6. BUS STOPS WILL BE RELOCATED AT THE RESPONSIBILITY OF MTA PRIOR TO CONSTRUCTION.

[7] CONTRACTOR SHALL MAINTAIN VISIBILITY TO ALL SIGNAL HEAD INDICATIONS BY KEEPING CONSTRUCTION EQUIPMENT BELOW THE STANDARD HEIGHT AND OUT OF THE CONE OF VISION FOR SIGNAL HEAD INDICATIONS.

[8] CONTRACTOR SHALL COVER EXISTING CONFLICTING STRIPING/PAVEMENT MARKING WITH BLACK TRAFFIC TAPE.

[9] CONTRACTOR SHALL COVER NB, EB, & WB LEFT TURN ARROW HEADS WITH DETACHABLE HEAD COVER AND DE–ENERGIZE AS DIRECTED BY TRAFFIC SIGNAL INSPECTOR.

[10] CONTRACTOR SHALL COORDINATE WITH THE CITY OF BEVERLY HILLS 14 DAYS IN ADVANCE OF IMPLEMENTATION TO DETERMINE THE NEED FOR FLASHING RED TRAFFIC SIGNAL OPERATION AND/OR TRAFFIC CONTROL OFFICERS.

WTCP – LA CIENEGA STATION – TC–SCE–03

DRAWN BY:

V&A INC.
530 S. HEWITT ST. SUITE 121
LOS ANGELES, CA 90013
213.972.9700

PARSONS BRINCKERHOFF
777 SOUTH FIGUEROA ST. 11TH FLOOR
LOS ANGELES, CA 90017

DIGALERT
CALL TOLL FREE
1–800–227–2600
2 Working Days Before You Dig

REGISTERED PROFESSIONAL ENGINEER PEDRO DANILO R. PERRY No. C56181 Exp. 06/30/14 CIVIL STATE OF CALIFORNIA

STAMP

REVISIONS

D

CITY OF BEVERLY HILLS
ENGINEERING DEPARTMENT

DESIGNED BY	DRAWN BY	CHECKED BY	APPROVED BY
VY	VE	MG II	

SUBMITTED BY RCE No.

REVIEWED BY

ASSISTANT CITY ENGINEER DATE

ENGINEER DATE

Traffic Control:

WESTSIDE SUBWAY EXTENSION PROJECT
ADVANCED UTILITY RELOCATION
LA CIENEGA STATION
SCE STAGE 2

P.O No.

CIP No.

PROJECT No.

SHEET NO 3 OF 27

CADD PROJECT FILE NAME: P:\Westside Subway Extension\Design\Base\La Cienega\TC-SCE-03 SCE Stage 2.dwg Apr 01, 2014 3:48pm_vEncarnacion

LANE CLOSED
C30 (CA)
36" x 36"

END ROAD WORK
G20-2

R3-18
30" x 30"

W1-6(LT)

W1-6(RT)
48" x 24"

TYPE N(CA)(TN(CA)
(ORANGE)
18" x 18"

ROAD WORK AHEAD
W20-1
36" x 36"

RIGHT LANE CLOSED AHEAD
C20(CA)(RT)
36" x 36"

ADDITIONAL NOTES:

1. REFER TO SHEET 1 FOR REQUIREMENTS REGARDING NOTIFICATION OF APPROPRIATE CITY AGENCIES.
2. THIS STAGE OF WORK WILL BE IMPLEMENTED BETWEEN THE HOURS OF 8PM TO 6AM (MONDAY TO FRIDAY) NIGHTLY FOR THE DURATION OF X DAYS (THE DURATION GIVEN FOR EACH STAGE IS PROVISIONAL AND MAY BE ADJUSTED BY THE CONTRACTOR FOLLOWING THEIR DETAILED CONSTRUCTION PLANNING AND THE AGREEMENT OF CITY OF BEVERLY HILLS). NOISE CAUSING ACTIVITIES TO CEASE AT 11PM.
3. DURING NON-WORKING HOURS, CONTRACTOR SHALL RESTORE CONDITIONS THAT WERE EXISTING PRIOR TO START OF THIS STAGE OF CONSTRUCTION. INCLUDING REMOVE CONES AND BARRICADES, COVER/UNCOVER SIGNS, AND STEEL PLATE ANY OPEN TRENCHES.
4. CONTRACTOR SHALL MAINTAIN ACCESS TO DRIVEWAYS AND LOCAL ACCESS TO RESIDENTS AT ALL TIMES.
5. CONTRACTOR SHALL PROTECT TRAFFIC SIGNAL DETECTOR LOOPS, BUS LOOPS, CONDUITS, INTERCONNECT, AND FIBER OPTIC CABLE. IF DAMAGED THESE SHALL BE REPAIRED IMMEDIATELY BY A QUALIFIED CONTRACTOR AT THE CONTRACTOR'S OWN EXPENSE.
6. BUS STOPS WILL BE RELOCATED AT THE RESPONSIBILITY OF MTA PRIOR TO CONSTRUCTION.

[7] CONTRACTOR SHALL MAINTAIN VISIBILITY TO ALL SIGNAL HEAD INDICATIONS BY KEEPING CONSTRUCTION EQUIPMENT BELOW THE STANDARD HEIGHT AND OUT OF THE CONE OF VISION FOR SIGNAL HEAD INDICATIONS.

[8] CONTRACTOR SHALL COVER EB AND WB LEFT TURN ARROW HEADS WITH DETACHABLE HEAD COVER AND DE-ENERGIZE AS DIRECTED BY TRAFFIC SIGNAL INSPECTOR.

LEFT TURN CLOSED AT LA CIENEGA

DETAIL "K"
TO BE IN OPERATION DURING CLOSURE

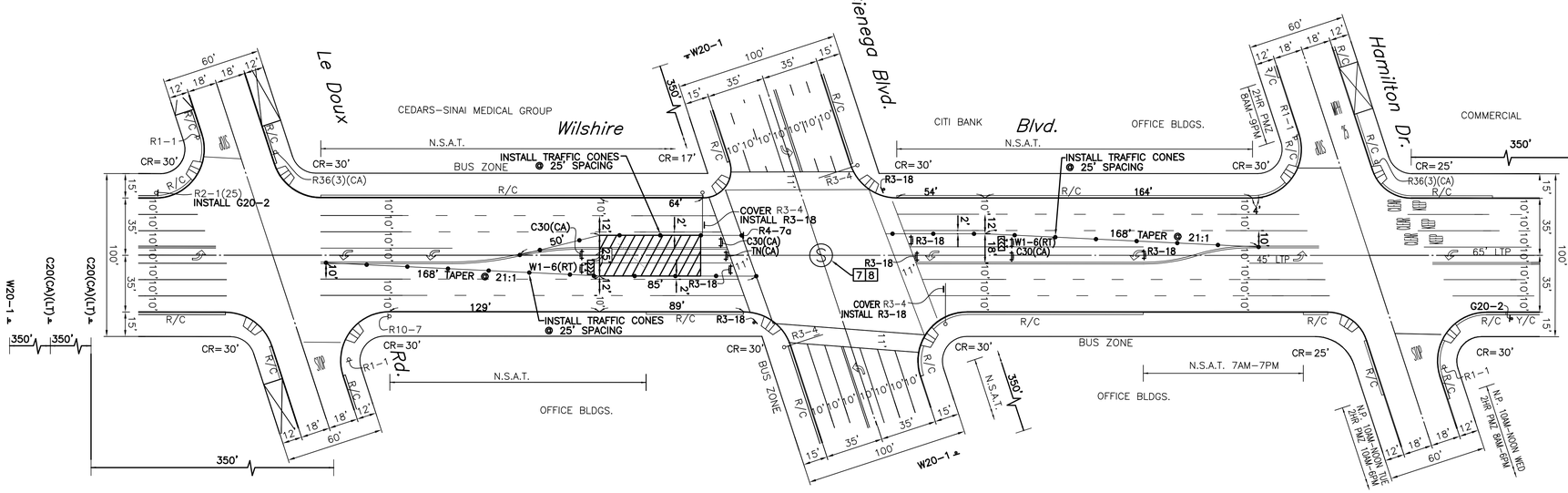

SCALE: 1"=40'

WTCP – LA CIENEGA STATION – TC-SCE-04

DRAWN BY:

V&A INC.
530 S. HEWITT ST. SUITE 121
LOS ANGELES, CA 90013
213.972.9700

PARSONS BRINCKERHOFF
777 SOUTH FIGUEROA ST. 11TH FLOOR
LOS ANGELES, CA 90017

DIGALERT
CALL TOLL FREE
1-800-227-2600
2 Working Days Before You Dig

REGISTERED PROFESSIONAL ENGINEER
PEDRO DANILO R. PERRY
No. C56181
Exp. 06/30/14
CIVIL
STATE OF CALIFORNIA
STAMP

REVISIONS

D CITY OF BEVERLY HILLS
ENGINEERING DEPARTMENT

DESIGNED BY	DRAWN BY	CHECKED BY	APPROVED BY
VH	VE	MG II	

SUBMITTED BY RCE No.
REVIEWED BY
ASSISTANT CITY ENGINEER DATE
ENGINEER DATE

Traffic Control:

WESTSIDE SUBWAY EXTENSION PROJECT
ADVANCED UTILITY RELOCATION
LA CIENEGA STATION
SCE STAGE 3

P.O No.
CIP No.
PROJECT No.
SHEET NO 4 OF 27

CADD PROJECT FILE NAME: P:\Westside Subway Extension\Design\Base\La Cienega\TC-SCE-04 SCE Stage 3.dwg Apr 01, 2014 3:49pm_vEncarnacion

LANE CLOSED
C30 (CA) 36" x 36"

END ROAD WORK
G20-2

NO TURNS
R3-3

LEFT LANE MUST TURN LEFT
R3-7(LT) 36" x 36"

W1-6(LT)

W1-6(RT) 48" x 24"

W12-1 36" x 36"

ROAD WORK AHEAD
W20-1 36" x 36"

LEFT LANE CLOSED AHEAD
C20(CA)(LT) 36" x 36"

TYPE N(CA)TN(CA) (ORANGE) 18" x 18"

KEEP RIGHT
R4-7a

R4-7 36" x 45"

MAY USE FULL LANE
R4-11

R3-18 30" x 30"

ADDITIONAL NOTES:

1. REFER TO SHEET 1 FOR REQUIREMENTS REGARDING NOTIFICATION OF APPROPRIATE CITY AGENCIES.
2. THIS STAGE OF WORK WILL BE IMPLEMENTED BETWEEN THE HOURS OF 8AM TO 2PM (SUNDAYS) FOR THE DURATION OF X SUNDAYS (THE DURATION GIVEN FOR EACH STAGE IS PROVISIONAL AND MAY BE ADJUSTED BY THE CONTRACTOR FOLLOWING THEIR DETAILED CONSTRUCTION PLANNING AND THE AGREEMENT OF CITY OF BEVERLY HILLS).
3. DURING NON-WORKING HOURS, CONTRACTOR SHALL RESTORE CONDITIONS THAT WERE EXISTING PRIOR TO START OF THIS STAGE OF CONSTRUCTION. INCLUDING REMOVE CONES AND BARRICADES, COVER/UNCOVER SIGNS, AND STEEL PLATE ANY OPEN TRENCHES.
4. CONTRACTOR SHALL MAINTAIN ACCESS TO DRIVEWAYS AND LOCAL ACCESS TO RESIDENTS AT ALL TIMES.
5. CONTRACTOR SHALL PROTECT TRAFFIC SIGNAL DETECTOR LOOPS, BUS LOOPS, CONDUITS, INTERCONNECT, AND FIBER OPTIC CABLE. IF DAMAGED THESE SHALL BE REPAIRED IMMEDIATELY BY A QUALIFIED CONTRACTOR AT THE CONTRACTOR'S OWN EXPENSE.
6. BUS STOPS WILL BE RELOCATED AT THE RESPONSIBILITY OF MTA PRIOR TO CONSTRUCTION.

ADDITIONAL NOTES (CONT'D):

7 CONTRACTOR SHALL MAINTAIN VISIBILITY TO ALL SIGNAL HEAD INDICATIONS BY KEEPING CONSTRUCTION EQUIPMENT BELOW THE STANDARD HEIGHT AND OUT OF THE CONE OF VISION FOR SIGNAL HEAD INDICATIONS.

8 CONTRACTOR SHALL COVER EB LEFT TURN ARROW HEADS WITH DETACHABLE HEAD COVER AND DE-ENERGIZE AS DIRECTED BY TRAFFIC SIGNAL INSPECTORS.

9 CONTRACTOR SHALL COORDINATE WITH CITY OF BEVERLY HILLS IN ADVANCE OF IMPLEMENTATION FOR TRAFFIC CONTROL OFFICER(TCO) AT THE LOCATION SHOWN ON THIS PLAN WHEN THE CONSTRUCTION WORK CONTINUES PAST 2PM.

WILSHIRE WILL BE REDUCED	ONE LANE AHEAD
TO ONE LANE	EXPECT DELAYS
XX/XX - XX/XX (TIME)	USE ALT ROUTE

DETAIL "A"
TO BE IN OPERATION ONE WEEK PRIOR TO CLOSURE

DETAIL "B"
TO BE IN OPERATION DURING CLOSURE

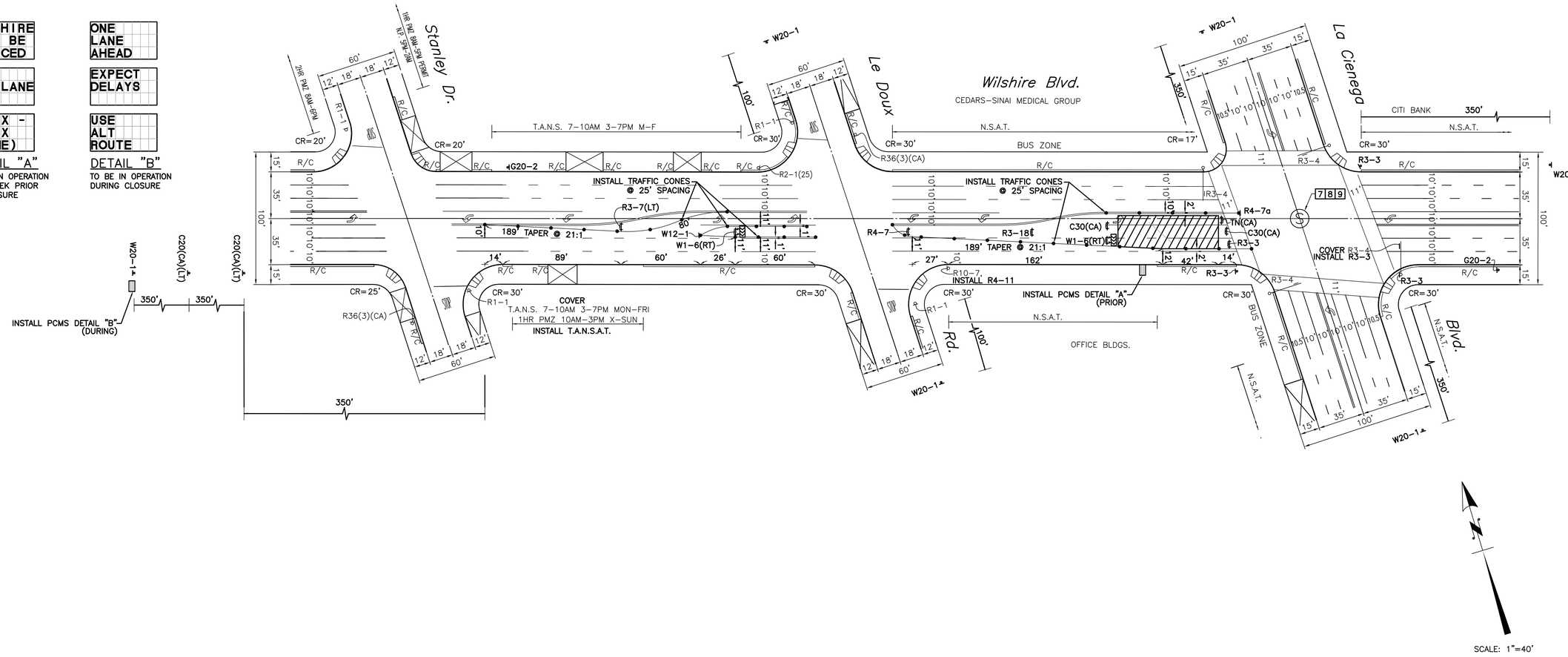

WTCP – LA CIENEGA STATION – TC-SCE-05

DRAWN BY:
V&A INC.
530 S. HEWITT ST. SUITE 121
LOS ANGELES, CA 90013
213.972.9700

PARSONS BRINCKERHOFF
777 SOUTH FIGUEROA ST. 11TH FLOOR
LOS ANGELES, CA 90017

DIGALERT
CALL TOLL FREE
1-800-227-2600
2 Working Days Before You Dig

STAMP

REVISIONS

D CITY OF BEVERLY HILLS
ENGINEERING DEPARTMENT

DESIGNED BY	DRAWN BY	CHECKED BY	APPROVED BY
VH	VE	MG II	

SUBMITTED BY RCE No.
REVIEWED BY
ASSISTANT CITY ENGINEER DATE
ENGINEER DATE

Traffic Control:

WESTSIDE SUBWAY EXTENSION PROJECT
ADVANCED UTILITY RELOCATION
LA CIENEGA STATION
SCE STAGE 4

P.O No.
CIP No.
PROJECT No.
SHEET NO 5 OF 27

CADD PROJECT FILE NAME: P:\Westside Subway Extension\Design\Base\La Cienega\TC-SCE-05 SCE Stage 4.dwg Apr 01, 2014 6:43pm_vEncarnacion

LANE CLOSED — C30 (CA) 36" x 36"

SIDEWALK CLOSED AHEAD CROSS HERE — R9-11(LT)

END ROAD WORK — G20-2

SIDEWALK CLOSED CROSS HERE — R9-11a(RT)

R3-18 30" x 30"

ONE WAY — R6-1(RT) 36" x 12"

W1-6(LT)

W1-6(RT) 48" x 24"

TYPE N(CA)/TN(CA) (ORANGE) 18" x 18"

ROAD WORK AHEAD — W20-1 36" x 36"

RIGHT LANE CLOSED AHEAD — C20(CA)/(RT) 36" x 36"

W1-7 48" x 24"

W6-3

LEFT LANE MUST TURN LEFT — R3-7(LT) 36" x 36"

KEEP RIGHT — R4-7a

NO TURNS — R3-3

W24-1(LT)

R4-7 36" x 45"

W12-1 36" x 36"

SIDEWALK CLOSED — R9-9

MAY USE FULL LANE — R4-11

ADDITIONAL NOTES:

1. REFER TO SHEET 1 FOR REQUIREMENTS REGARDING NOTIFICATION OF APPROPRIATE CITY AGENCIES.
2. THIS STAGE OF WORK WILL BE IMPLEMENTED BETWEEN THE HOURS OF 8AM TO 2PM (SUNDAYS) FOR THE DURATION OF X SUNDAYS (THE DURATION GIVEN FOR EACH STAGE IS PROVISIONAL AND MAY BE ADJUSTED BY THE CONTRACTOR FOLLOWING THEIR DETAILED CONSTRUCTION PLANNING AND THE AGREEMENT OF CITY OF BEVERLY HILLS).
3. DURING NON-WORKING HOURS, CONTRACTOR SHALL RESTORE CONDITIONS THAT WERE EXISTING PRIOR TO START OF THIS STAGE OF CONSTRUCTION. INCLUDING REMOVE CONES AND BARRICADES, COVER/UNCOVER SIGNS, AND STEEL PLATE ANY OPEN TRENCHES.
4. CONTRACTOR SHALL MAINTAIN ACCESS TO DRIVEWAYS AND LOCAL ACCESS TO RESIDENTS AT ALL TIMES.
5. CONTRACTOR SHALL PROTECT TRAFFIC SIGNAL DETECTOR LOOPS, BUS LOOPS, CONDUITS, INTERCONNECT, AND FIBER OPTIC CABLE. IF DAMAGED THESE SHALL BE REPAIRED IMMEDIATELY BY A QUALIFIED CONTRACTOR AT THE CONTRACTOR'S OWN EXPENSE.
6. BUS STOPS WILL BE RELOCATED AT THE RESPONSIBILITY OF MTA PRIOR TO CONSTRUCTION.

[7] CONTRACTOR SHALL MAINTAIN VISIBILITY TO ALL SIGNAL HEAD INDICATIONS BY KEEPING CONSTRUCTION EQUIPMENT BELOW THE STANDARD HEIGHT AND OUT OF THE CONE OF VISION FOR SIGNAL HEAD INDICATIONS.

ADDITIONAL NOTES (CONT'D):

[8] CONTRACTOR SHALL COVER EXISTING CONFLICTING STRIPING/PAVEMENT MARKING WITH BLACK TRAFFIC TAPE.

[9] CONTRACTOR SHALL COVER EB AND WB LEFT TURN ARROW HEADS WITH DETACHABLE HEAD COVER AND DE-ENERGIZE AS DIRECTED BY TRAFFIC SIGNAL INSPECTOR.

[11] CONTRACTOR SHALL COORDINATE WITH CITY OF BEVERLY HILLS IN ADVANCE OF IMPLEMENTATION FOR TRAFFIC CONTROL OFFICER (TCO) AT THE LOCATION SHOWN ON THIS PLAN WHEN THE CONSTRUCTION WORK CONTINUES PAST 2PM.

[12] CONTRACTOR SHALL COORDINATE WITH THE CITY OF BEVERLY HILLS 14 DAYS IN ADVANCE OF IMPLEMENTATION TO DETERMINE THE NEED FOR FLASHING RED TRAFFIC SIGNAL OPERATION AND/OR TRAFFIC CONTROL OFFICERS.

LEFT TURN CLOSED AT LA CIENEGA

DETAIL "K"
TO BE IN OPERATION DURING CLOSURE

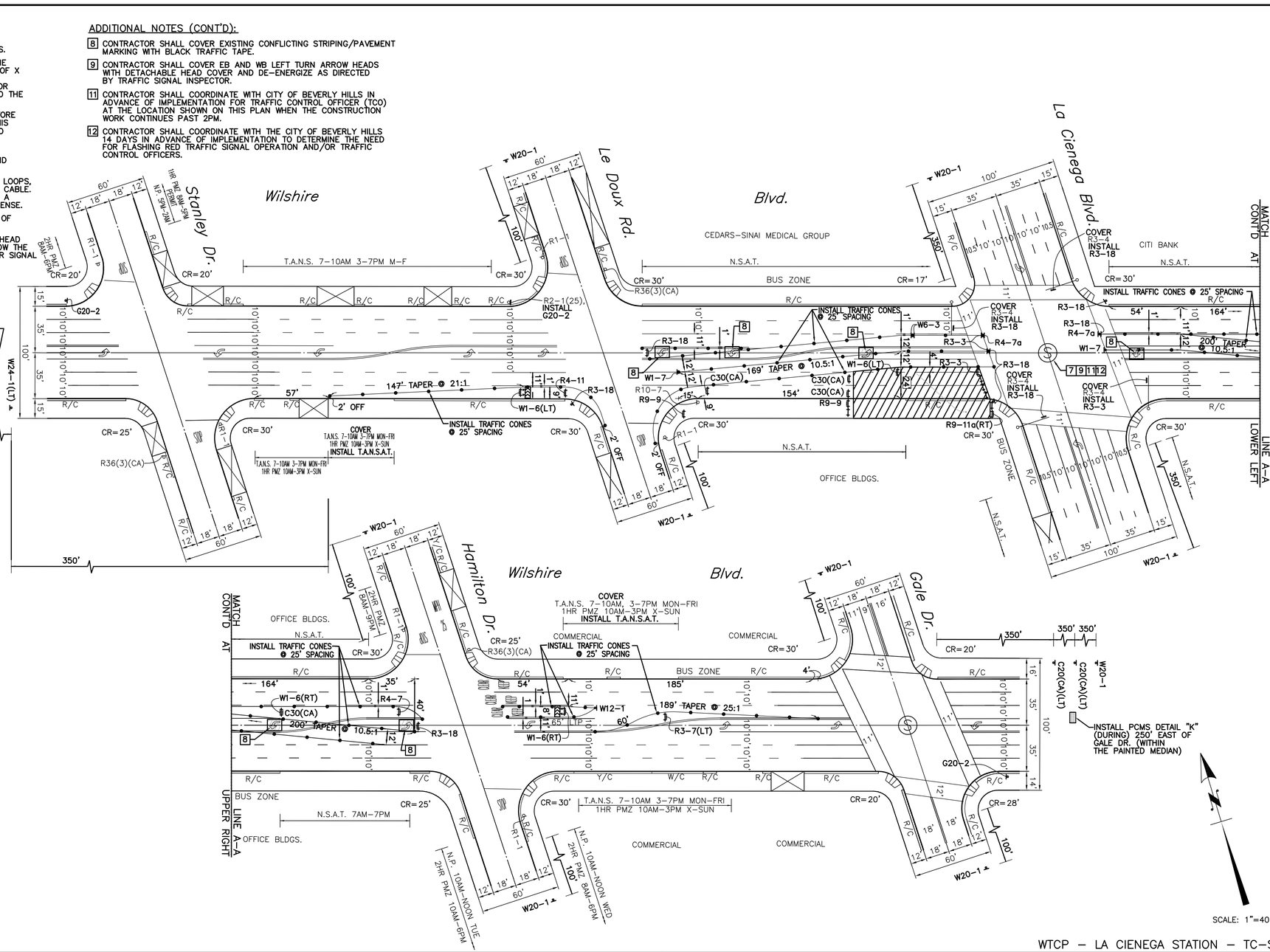

WTCP – LA CIENEGA STATION – TC-SCE-06

DRAWN BY:

V&A INC.
530 S. HEWITT ST. SUITE 121
LOS ANGELES, CA 90013
213.972.9700

PARSONS BRINCKERHOFF
777 SOUTH FIGUEROA ST. 11TH FLOOR
LOS ANGELES, CA 90017

DIGALERT
CALL TOLL FREE
1-800-227-2600
2 Working Days Before You Dig

REGISTERED PROFESSIONAL ENGINEER — PEDRO DANILO ESPIRITU — No. C56121 — Exp. 08/30/14 — CIVIL — STATE OF CALIFORNIA
STAMP

REVISIONS

D — CITY OF BEVERLY HILLS
ENGINEERING DEPARTMENT

DESIGNED BY	DRAWN BY	CHECKED BY	APPROVED BY
VH	VE	MG II	

SUBMITTED BY _____ RCE No. _____
REVIEWED BY _____ ENGINEER _____ DATE
ASSISTANT CITY ENGINEER _____ DATE

Traffic Control:

WESTSIDE SUBWAY EXTENSION PROJECT
ADVANCED UTILITY RELOCATION
LA CIENEGA STATION
SCE STAGE 5

P.O No.
CIP No.
PROJECT No.
SHEET NO 6 OF 27

CADD PROJECT FILE NAME: P:\Westside Subway Extension\Design\Base\La Cienega\TC-SCE-06 SCE Stage 5.dwg Apr 01, 2014 3:50pm_vEncarnacion

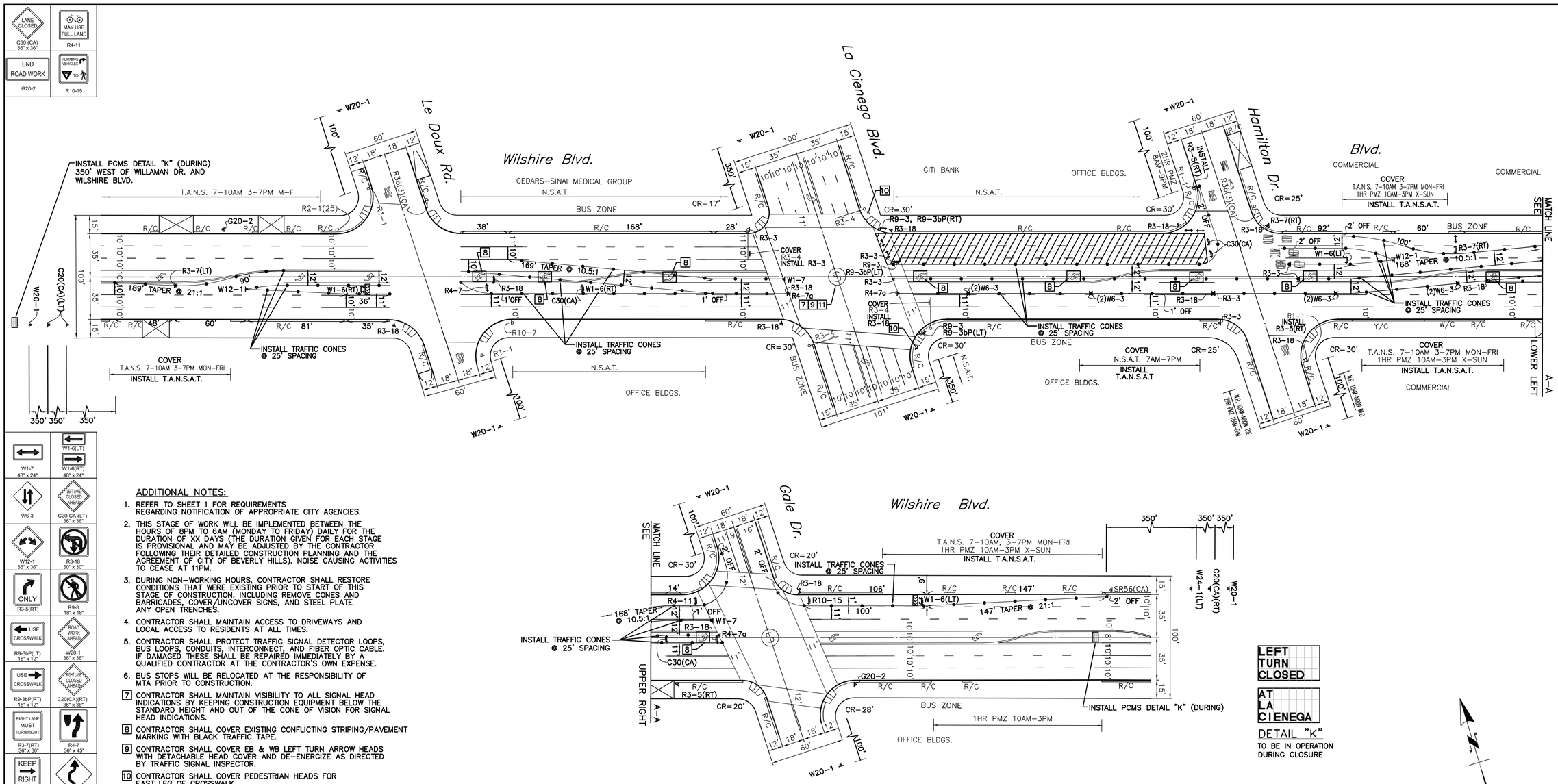

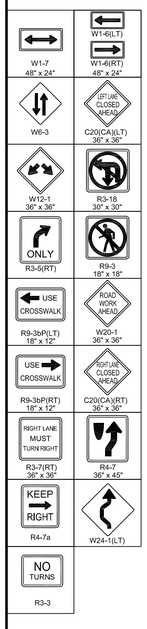

ADDITIONAL NOTES:

1. REFER TO SHEET 1 FOR REQUIREMENTS REGARDING NOTIFICATION OF APPROPRIATE CITY AGENCIES.
2. THIS STAGE OF WORK WILL BE IMPLEMENTED BETWEEN THE HOURS OF 8PM TO 6AM (MONDAY TO FRIDAY) DAILY FOR THE DURATION OF XX DAYS (THE DURATION GIVEN FOR EACH STAGE IS PROVISIONAL AND MAY BE ADJUSTED BY THE CONTRACTOR FOLLOWING THEIR DETAILED CONSTRUCTION PLANNING AND THE AGREEMENT OF CITY OF BEVERLY HILLS). NOISE CAUSING ACTIVITIES TO CEASE AT 11PM.
3. DURING NON-WORKING HOURS, CONTRACTOR SHALL RESTORE CONDITIONS THAT WERE EXISTING PRIOR TO START OF THIS STAGE OF CONSTRUCTION. INCLUDING REMOVE CONES AND BARRICADES, COVER/UNCOVER SIGNS, AND STEEL PLATE ANY OPEN TRENCHES.
4. CONTRACTOR SHALL MAINTAIN ACCESS TO DRIVEWAYS AND LOCAL ACCESS TO RESIDENTS AT ALL TIMES.
5. CONTRACTOR SHALL PROTECT TRAFFIC SIGNAL DETECTOR LOOPS, BUS LOOPS, CONDUITS, INTERCONNECT, AND FIBER OPTIC CABLE. IF DAMAGED THESE SHALL BE REPAIRED IMMEDIATELY BY A QUALIFIED CONTRACTOR AT THE CONTRACTOR'S OWN EXPENSE.
6. BUS STOPS WILL BE RELOCATED AT THE RESPONSIBILITY OF MTA PRIOR TO CONSTRUCTION.
7. CONTRACTOR SHALL MAINTAIN VISIBILITY TO ALL SIGNAL HEAD INDICATIONS BY KEEPING CONSTRUCTION EQUIPMENT BELOW THE STANDARD HEIGHT AND OUT OF THE CONE OF VISION FOR SIGNAL HEAD INDICATIONS.
8. CONTRACTOR SHALL COVER EXISTING CONFLICTING STRIPING/PAVEMENT MARKING WITH BLACK TRAFFIC TAPE.
9. CONTRACTOR SHALL COVER EB & WB LEFT TURN ARROW HEADS WITH DETACHABLE HEAD COVER AND DE-ENERGIZE AS DIRECTED BY TRAFFIC SIGNAL INSPECTOR.
10. CONTRACTOR SHALL COVER PEDESTRIAN HEADS FOR EAST LEG OF CROSSWALK.
11. CONTRACTOR SHALL COORDINATE WITH THE CITY OF BEVERLY HILLS 14 DAYS IN ADVANCE OF IMPLEMENTATION TO DETERMINE THE NEED FOR FLASHING RED TRAFFIC SIGNAL OPERATION AND/OR TRAFFIC CONTROL OFFICERS.

WTCP – LA CIENEGA STATION – TC-SCE-07

DRAWN BY:

V&A INC.
530 S. HEWITT ST. SUITE 121
LOS ANGELES, CA 90013
213.972.9700

PARSONS BRINCKERHOFF
777 SOUTH FIGUEROA ST. 11TH FLOOR
LOS ANGELES, CA 90017

DIGALERT
CALL TOLL FREE
1-800-227-2600
2 Working Days Before You Dig

REGISTERED PROFESSIONAL ENGINEER PEDRO DANILO E. PEURA No. C56181 Exp. 06/30/14 CIVIL STATE OF CALIFORNIA
STAMP

REVISIONS

D

CITY OF BEVERLY HILLS
ENGINEERING DEPARTMENT

DESIGNED BY	DRAWN BY	CHECKED BY	APPROVED BY
VH	VE	MG II	

SUBMITTED BY RCE No.
REVIEWED BY ENGINEER DATE
ASSISTANT CITY ENGINEER DATE

Traffic Control:

WESTSIDE SUBWAY EXTENSION PROJECT
ADVANCED UTILITY RELOCATION
LA CIENEGA STATION
SCE STAGE 6

P.O No.
CIP No.
PROJECT No.
SHEET NO 7 OF 27

CADD PROJECT FILE NAME: P:\Westside Subway Extension\Design\Base\La Cienega\TC-SCE-07-SCE Stage 6.dwg Apr 01, 2014 3:50pm...vEncarnacion

C30 (CA) 36" x 36"

W12-1 36" x 36"

END ROAD WORK — G20-2

LEFT LANE CLOSED AHEAD — C20(CA)(LT) 36" x 36"

R3-18 30" x 30"

W4-3 36" x 36"

ONE WAY — R6-1(RT) 36" x 12"

NO TURNS — R3-3

W1-6(LT) 48" x 24"

W1-6(RT) 48" x 24"

TYPE N(CA)/TN(CA) (ORANGE) 18" x 18"

ROAD WORK AHEAD — W20-1 36" x 36"

RIGHT LANE CLOSED AHEAD — C20(CA)(RT) 36" x 36"

W1-7 48" x 24"

W6-3

LEFT LANE MUST TURN LEFT — R3-7(LT) 36" x 36"

W24-1(LT)

KEEP RIGHT — R4-7a

TURNING VEHICLES TO — R10-15

R4-7 36" x 45"

SIDEWALK CLOSED AHEAD CROSS HERE — R9-11(RT)

SIDEWALK CLOSED AHEAD CROSS HERE — R9-11(LT)

R9-3

ADDITIONAL NOTES:

1. REFER TO SHEET 1 FOR REQUIREMENTS REGARDING NOTIFICATION OF APPROPRIATE CITY AGENCIES.
2. THIS STAGE OF WORK WILL BE IMPLEMENTED BETWEEN THE HOURS OF 8PM TO 6AM (MONDAY TO FRIDAY) NIGHTLY FOR THE DURATION OF X DAYS (THE DURATION GIVEN FOR EACH STAGE IS PROVISIONAL AND MAY BE ADJUSTED BY THE CONTRACTOR FOLLOWING THEIR DETAILED CONSTRUCTION PLANNING AND THE AGREEMENT OF CITY OF BEVERLY HILLS). NOISE CAUSING ACTIVITIES TO CEASE AT 11PM.
3. DURING NON-WORKING HOURS, CONTRACTOR SHALL RESTORE CONDITIONS THAT WERE EXISTING PRIOR TO START OF THIS STAGE OF CONSTRUCTION. INCLUDING REMOVE CONES AND BARRICADES, COVER/UNCOVER SIGNS, AND STEEL PLATE ANY OPEN TRENCHES.
4. CONTRACTOR SHALL MAINTAIN ACCESS TO DRIVEWAYS AND LOCAL ACCESS TO RESIDENTS AT ALL TIMES.
5. CONTRACTOR SHALL PROTECT TRAFFIC SIGNAL DETECTOR LOOPS, BUS LOOPS, CONDUITS, INTERCONNECT, AND FIBER OPTIC CABLE. IF DAMAGED THESE SHALL BE REPAIRED IMMEDIATELY BY A QUALIFIED CONTRACTOR AT THE CONTRACTOR'S OWN EXPENSE.
6. BUS STOPS WILL BE RELOCATED AT THE RESPONSIBILITY OF MTA PRIOR TO CONSTRUCTION.

[7] CONTRACTOR SHALL COVER EXISTING CONFLICTING STRIPING/PAVEMENT MARKING WITH BLACK TRAFFIC TAPE.

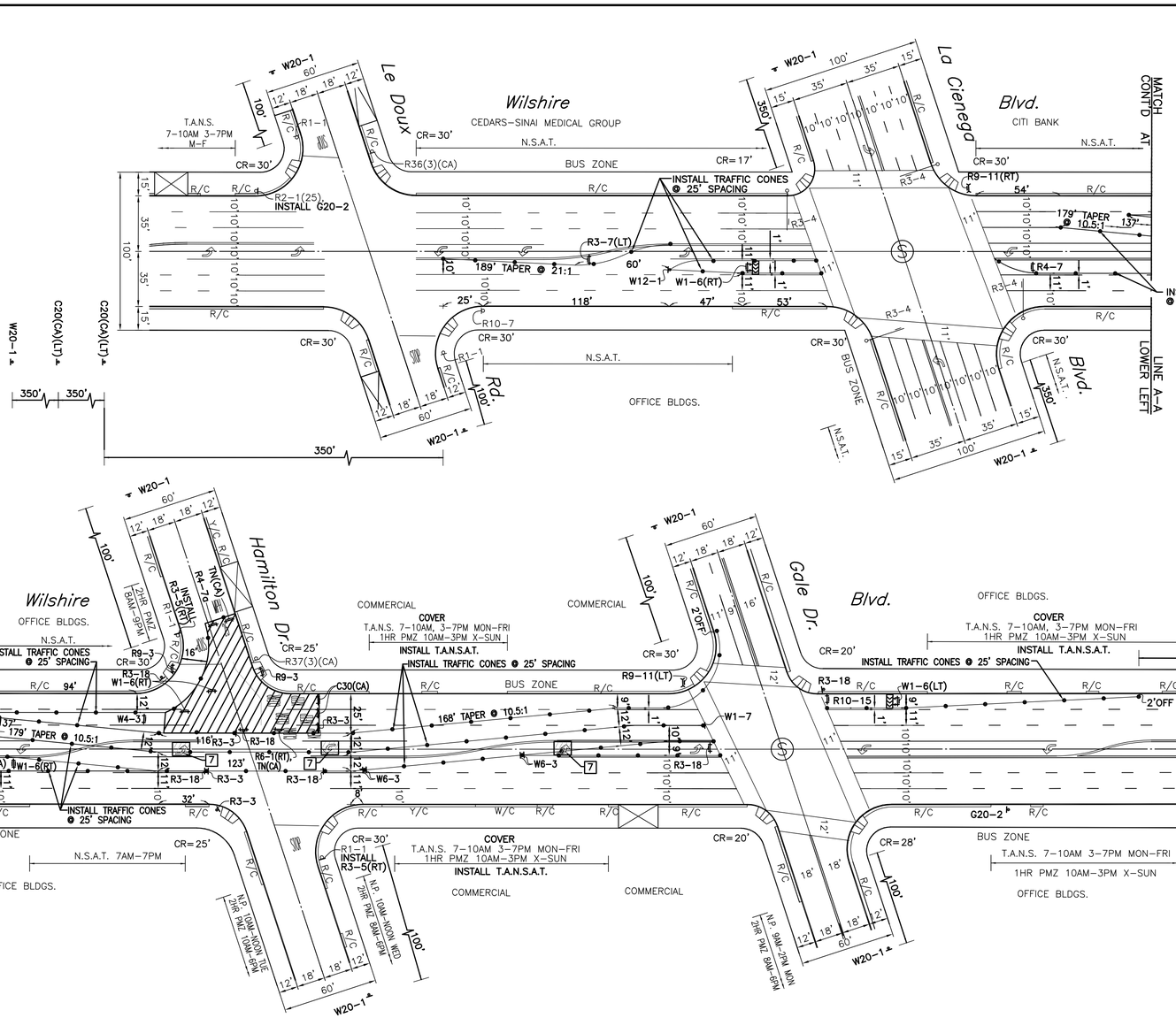

WTCP – LA CIENEGA STATION – TC-SCE-08

DRAWN BY:

V&A INC.
530 S. HEWITT ST. SUITE 121
LOS ANGELES, CA 90013
213.972.9700

PARSONS BRINCKERHOFF
777 SOUTH FIGUEROA ST. 11TH FLOOR
LOS ANGELES, CA 90017

DIGALERT
CALL TOLL FREE
1-800-227-2600
2 Working Days Before You Dig

REGISTERED PROFESSIONAL ENGINEER — PEDRO DANILO R. PERN — No. C56181 — Exp. 06/30/14 — CIVIL — STATE OF CALIFORNIA

STAMP

REVISIONS

D

CITY OF BEVERLY HILLS
ENGINEERING DEPARTMENT

DESIGNED BY	DRAWN BY	CHECKED BY	APPROVED BY
VH	VE	MG II	

SUBMITTED BY — RCE No.

REVIEWED BY — ENGINEER — DATE

ASSISTANT CITY ENGINEER — DATE

Traffic Control:

WESTSIDE SUBWAY EXTENSION PROJECT
ADVANCED UTILITY RELOCATION
LA CIENEGA STATION
SCE STAGE 7

P.O No.

CIP No.

PROJECT No.

SHEET NO 8 OF 27

CADD PROJECT FILE NAME: P:\Westside Subway Extension\Design\Base\La Cienega\TC-SCE-08 SCE Stage 7.dwg Apr 01, 2014 3:51pm_vEncarnacion

LANE CLOSED
C30 (CA)
36" x 36"

R9-3
18" x 18"

END ROAD WORK
G20-2

R3-18
30" x 30"

LEFT LANE MUST TURN LEFT
R3-7(LT)
36" x 36"

W1-6(LT)

W1-6(RT)
48" x 24"

W12-1
36" x 36"

ROAD WORK AHEAD
W20-1
36" x 36"

LEFT LANE CLOSED AHEAD
C20(CA)(LT)
36" x 36"

CENTER LANE CLOSED AHEAD
C20(CA)(CT)
36" x 36"

TYPE N(CA)TN(CA)
(ORANGE)
18" x 18"

R4-7
36" x 45"

W6-3

NO TURNS
R3-3

ONE WAY
R6-1(RT)
36" x 12"

USE CROSSWALK
R9-3bP(RT)
18" x 12"

USE CROSSWALK
R9-3bP(LT)
18" x 12"

WILSHIRE WILL BE REDUCED	ONE LANE AHEAD
TO ONE LANE	EXPECT DELAYS
XX/XX - XX/XX (TIME)	USE ALT ROUTE

DETAIL "A"
TO BE IN OPERATION ONE WEEK PRIOR TO CLOSURE

DETAIL "B"
TO BE IN OPERATION DURING CLOSURE

ADDITIONAL NOTES:

1. REFER TO SHEET 1 FOR REQUIREMENTS REGARDING NOTIFICATION OF APPROPRIATE CITY AGENCIES.
2. THIS STAGE OF WORK WILL BE IMPLEMENTED BETWEEN THE HOURS OF 8PM TO 6AM (MONDAY TO FRIDAY) NIGHTLY FOR THE DURATION OF X DAYS (THE DURATION GIVEN FOR EACH STAGE IS PROVISIONAL AND MAY BE ADJUSTED BY THE CONTRACTOR FOLLOWING THEIR DETAILED CONSTRUCTION PLANNING AND THE AGREEMENT OF CITY OF BEVERLY HILLS). NOISE CAUSING ACTIVITIES TO CEASE AT 11PM.
3. DURING NON-WORKING HOURS, CONTRACTOR SHALL RESTORE CONDITIONS THAT WERE EXISTING PRIOR TO START OF THIS STAGE OF CONSTRUCTION. INCLUDING REMOVE CONES AND BARRICADES, COVER/UNCOVER SIGNS, AND STEEL PLATE ANY OPEN TRENCHES.
4. CONTRACTOR SHALL MAINTAIN ACCESS TO DRIVEWAYS AND LOCAL ACCESS TO RESIDENTS AT ALL TIMES.
5. CONTRACTOR SHALL PROTECT TRAFFIC SIGNAL DETECTOR LOOPS, BUS LOOPS, CONDUITS, INTERCONNECT, AND FIBER OPTIC CABLE. IF DAMAGED THESE SHALL BE REPAIRED IMMEDIATELY BY A QUALIFIED CONTRACTOR AT THE CONTRACTOR'S OWN EXPENSE.
6. BUS STOPS WILL BE RELOCATED AT THE RESPONSIBILITY OF MTA PRIOR TO CONSTRUCTION.

[7] CONTRACTOR SHALL COVER EXISTING CONFLICTING STRIPING/PAVEMENT MARKING WITH BLACK TRAFFIC TAPE.

[8] CONTRACTOR SHALL MAINTAIN VISIBILITY TO ALL SIGNAL HEAD INDICATIONS BY KEEPING CONSTRUCTION EQUIPMENT BELOW THE STANDARD HEIGHT AND OUT OF THE CONE OF VISION FOR SIGNAL HEAD INDICATIONS.

[9] CONTRACTOR SHALL COORDINATE WITH THE CITY OF BEVERLY HILLS 14 DAYS IN ADVANCE OF IMPLEMENTATION TO DETERMINE THE NEED FOR FLASHING RED TRAFFIC SIGNAL OPERATION AND/OR TRAFFIC CONTROL OFFICERS.

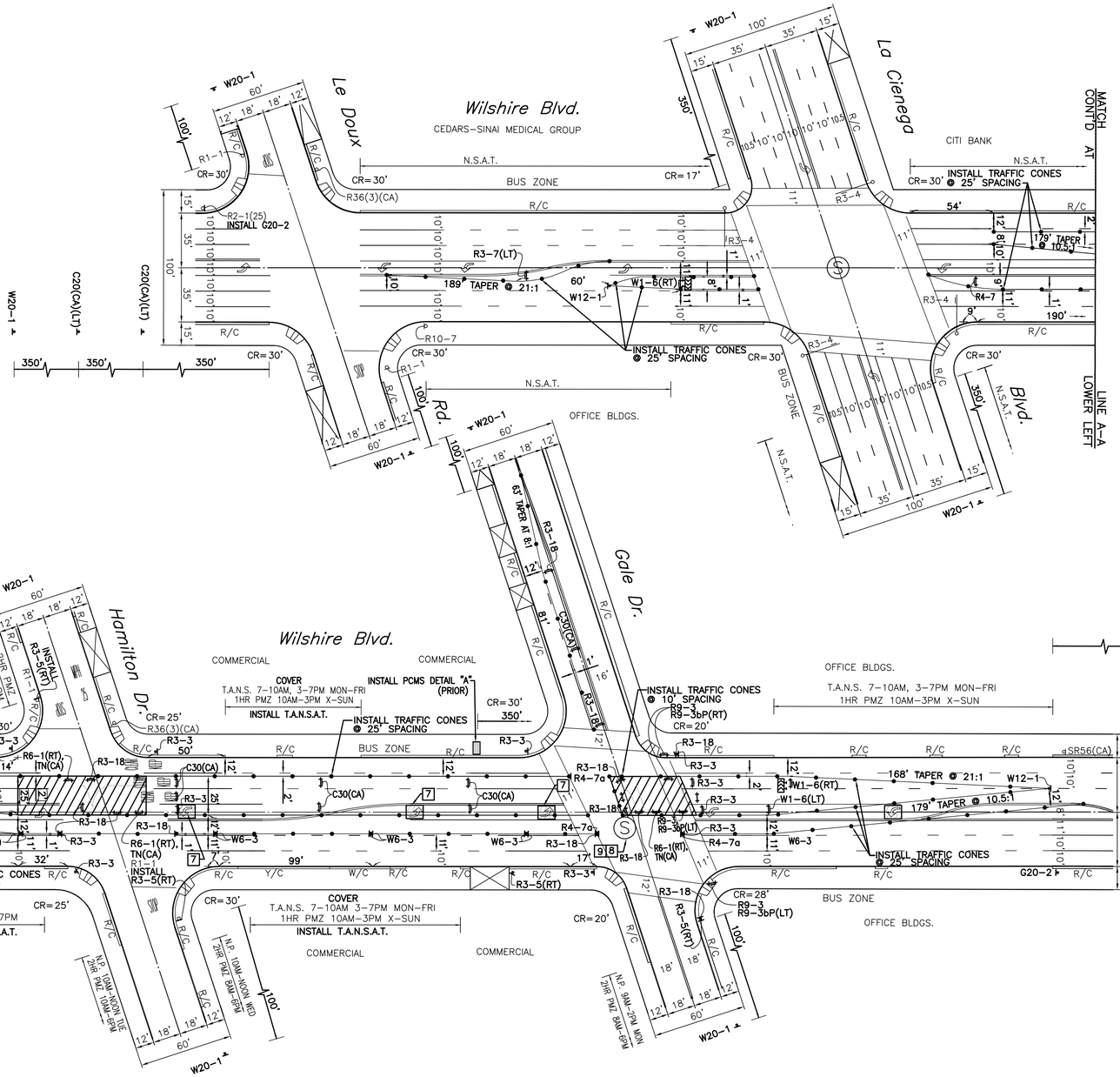

WTCP – LA CIENEGA STATION – TC-SCE-09

DRAWN BY:

V&A INC.
530 S. HEWITT ST. SUITE 121
LOS ANGELES, CA 90013
213.972.9700

PARSONS BRINCKERHOFF
777 SOUTH FIGUEROA ST. 11TH FLOOR
LOS ANGELES, CA 90017

DIGALERT
CALL TOLL FREE
1-800-227-2600
2 Working Days Before You Dig

REGISTERED PROFESSIONAL ENGINEER
PEDRO DANILO R. PERRY
No. C56121
Exp. 06/30/14
CIVIL
STATE OF CALIFORNIA
STAMP

REVISIONS

D

CITY OF BEVERLY HILLS
ENGINEERING DEPARTMENT

DESIGNED BY	DRAWN BY	CHECKED BY	APPROVED BY
VH	VE	MG II	

SUBMITTED BY RCE No.
REVIEWED BY
ASSISTANT CITY ENGINEER DATE
ENGINEER DATE

Traffic Control:

WESTSIDE SUBWAY EXTENSION PROJECT
ADVANCED UTILITY RELOCATION
LA CIENEGA STATION
SCE STAGE 8

P.O No.
CIP No.
PROJECT No.
SHEET NO 9 OF 27

CADD PROJECT FILE NAME: P:\Vestside Subway Extension\Design\Base\La Cienega\TC-SCE-09 SCE Stage 8.dwg Apr 01, 2014 3:54pm...\vEncarnacion

C30 (CA) 36" x 36"

R9-3bP(RT) 18" x 12"

G20-2

R9-3bP(LT) 18" x 12"

R3-18 30" x 30"

W1-6(LT)

W1-6(RT) 48" x 24"

TYPE N(CA)/TN(CA) (ORANGE) 18" x 18"

W20-1 36" x 36"

C20(CA)(LT) 36" x 36"

R3-5(RT)

R6-1(RT) 36" x 12"

R9-3 18" x 18"

ADDITIONAL NOTES:

1. REFER TO SHEET 1 FOR REQUIREMENTS REGARDING NOTIFICATION OF APPROPRIATE CITY AGENCIES.
2. THIS STAGE OF WORK WILL BE IMPLEMENTED BETWEEN THE HOURS OF 8PM TO 6AM (MONDAY TO FRIDAY) NIGHTLY FOR THE DURATION OF X DAYS (THE DURATION GIVEN FOR EACH STAGE IS PROVISIONAL AND MAY BE ADJUSTED BY THE CONTRACTOR FOLLOWING THEIR DETAILED CONSTRUCTION PLANNING AND THE AGREEMENT OF CITY OF BEVERLY HILLS). NOISE CAUSING ACTIVITIES TO CEASE AT 11PM.
3. DURING NON-WORKING HOURS, CONTRACTOR SHALL RESTORE CONDITIONS THAT WERE EXISTING PRIOR TO START OF THIS STAGE OF CONSTRUCTION. INCLUDING REMOVE CONES AND BARRICADES, COVER/UNCOVER SIGNS, AND STEEL PLATE ANY OPEN TRENCHES.
4. CONTRACTOR SHALL MAINTAIN ACCESS TO DRIVEWAYS AND LOCAL ACCESS TO RESIDENTS AT ALL TIMES.
5. CONTRACTOR SHALL PROTECT TRAFFIC SIGNAL DETECTOR LOOPS, BUS LOOPS, CONDUITS, INTERCONNECT, AND FIBER OPTIC CABLE. IF DAMAGED THESE SHALL BE REPAIRED IMMEDIATELY BY A QUALIFIED CONTRACTOR AT THE CONTRACTOR'S OWN EXPENSE.
6. BUS STOPS WILL BE RELOCATED AT THE RESPONSIBILITY OF MTA PRIOR TO CONSTRUCTION.

7 CONTRACTOR SHALL MAINTAIN VISIBILITY TO ALL SIGNAL HEAD INDICATIONS BY KEEPING CONSTRUCTION EQUIPMENT BELOW THE STANDARD HEIGHT AND OUT OF THE CONE OF VISION FOR SIGNAL HEAD INDICATIONS.

8 CONTRACTOR SHALL COVER PEDESTRIAN HEADS FOR EAST LEG OF CROSSWALK.

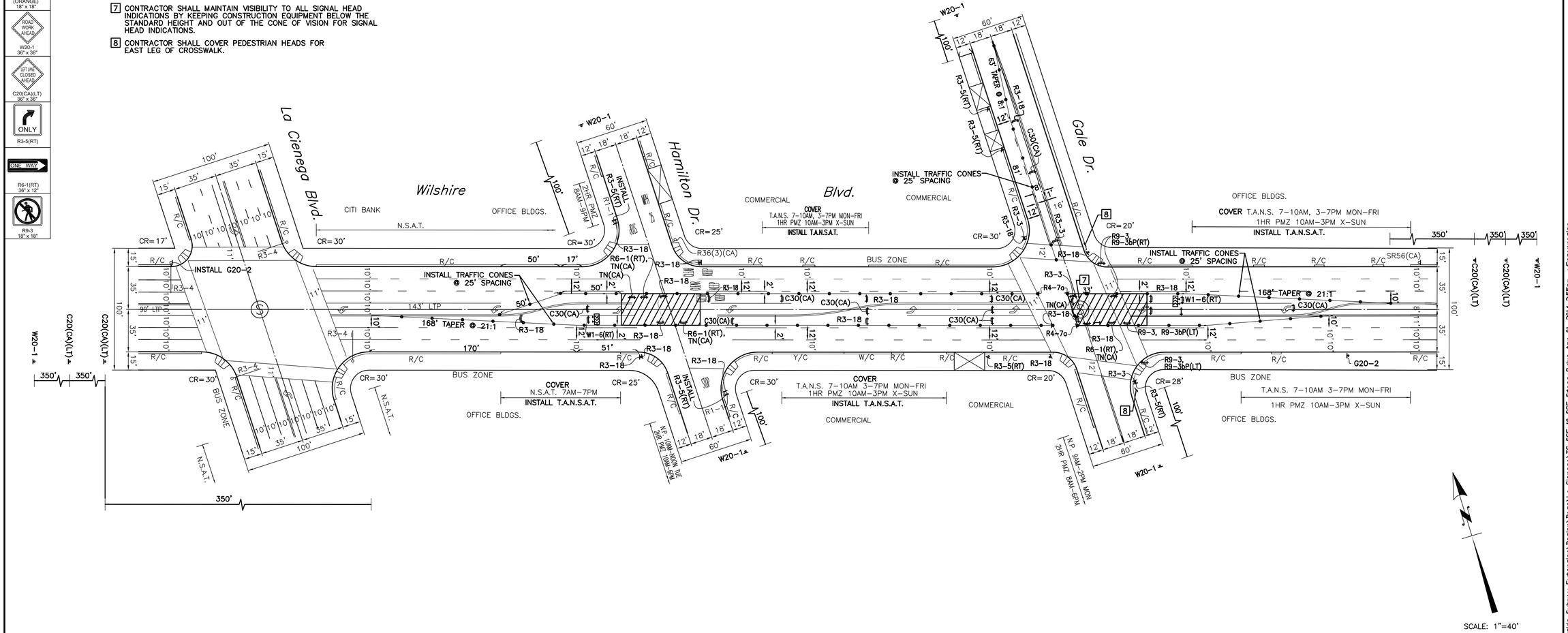

WTCP – LA CIENEGA STATION – TC-SCE-10

DRAWN BY:

V&A INC.
530 S. HEWITT ST. SUITE 121
LOS ANGELES, CA 90013
213.972.9700

PARSONS BRINCKERHOFF
777 SOUTH FIGUEROA ST. 11TH FLOOR
LOS ANGELES, CA 90017

DIGALERT
CALL TOLL FREE
1-800-227-2600
2 Working Days Before You Dig

REGISTERED PROFESSIONAL ENGINEER
PEDRO DANILO R. PERY
No. C35181
Exp. 06/30/14
CIVIL
STATE OF CALIFORNIA
STAMP

REVISIONS

D CITY OF BEVERLY HILLS
ENGINEERING DEPARTMENT

DESIGNED BY	DRAWN BY	CHECKED BY	APPROVED BY
VH	VE	MG II	

SUBMITTED BY RCE No.
REVIEWED BY
ASSISTANT CITY ENGINEER DATE
ENGINEER DATE

Traffic Control:

WESTSIDE SUBWAY EXTENSION PROJECT
ADVANCED UTILITY RELOCATION
LA CIENEGA STATION
SCE STAGE 9

P.O No.
CIP No.
PROJECT No.
SHEET NO 10 OF 27

CADD PROJECT FILE NAME: P:\Westside Subway Extension\Design\Base\La Cienega\TC-SCE-10 SCE Stage 9.dwg Apr 01, 2014 3:55pm_vEncarnacion

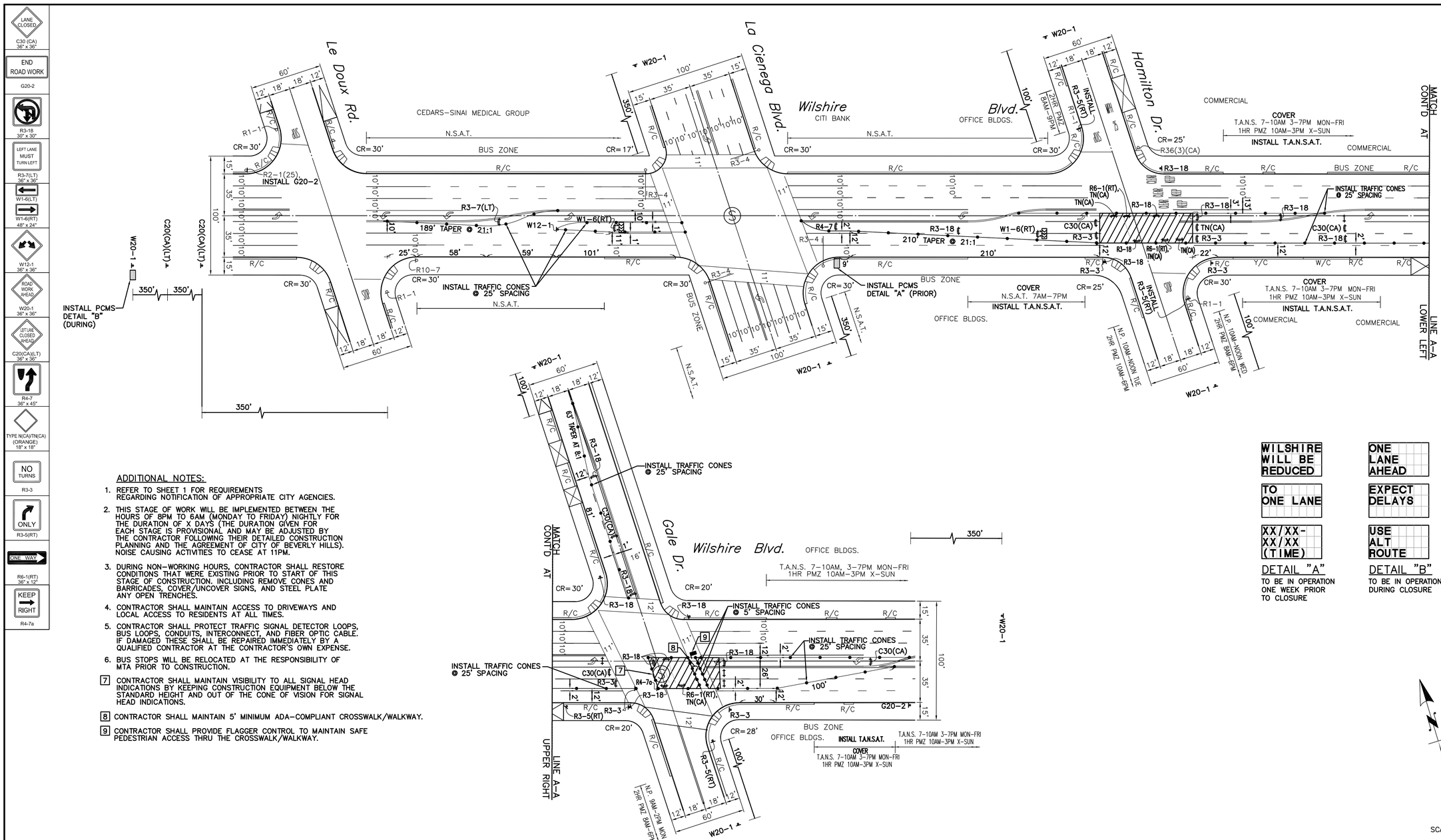

LANE CLOSED
C30 (CA)
36" x 36"

END ROAD WORK
G20-2

R3-18
30" x 30"

LEFT LANE MUST TURN LEFT
R3-7(LT)
36" x 36"

W1-6(LT)

W1-6(RT)
48" x 24"

W12-1
36" x 36"

ROAD WORK AHEAD
W20-1
36" x 36"

LEFT LANE CLOSED AHEAD
C20(CA)(LT)
36" x 36"

R4-7
36" x 45"

TYPE N(CA)TN(CA)
(ORANGE)
18" x 18"

NO TURNS
R3-3

ONLY
R3-5(RT)

ONE WAY
R6-1(RT)
36" x 12"

KEEP RIGHT
R4-7a

ADDITIONAL NOTES:

1. REFER TO SHEET 1 FOR REQUIREMENTS REGARDING NOTIFICATION OF APPROPRIATE CITY AGENCIES.
2. THIS STAGE OF WORK WILL BE IMPLEMENTED BETWEEN THE HOURS OF 8PM TO 6AM (MONDAY TO FRIDAY) NIGHTLY FOR THE DURATION OF X DAYS (THE DURATION GIVEN FOR EACH STAGE IS PROVISIONAL AND MAY BE ADJUSTED BY THE CONTRACTOR FOLLOWING THEIR DETAILED CONSTRUCTION PLANNING AND THE AGREEMENT OF CITY OF BEVERLY HILLS). NOISE CAUSING ACTIVITIES TO CEASE AT 11PM.
3. DURING NON-WORKING HOURS, CONTRACTOR SHALL RESTORE CONDITIONS THAT WERE EXISTING PRIOR TO START OF THIS STAGE OF CONSTRUCTION. INCLUDING REMOVE CONES AND BARRICADES, COVER/UNCOVER SIGNS, AND STEEL PLATE ANY OPEN TRENCHES.
4. CONTRACTOR SHALL MAINTAIN ACCESS TO DRIVEWAYS AND LOCAL ACCESS TO RESIDENTS AT ALL TIMES.
5. CONTRACTOR SHALL PROTECT TRAFFIC SIGNAL DETECTOR LOOPS, BUS LOOPS, CONDUITS, INTERCONNECT, AND FIBER OPTIC CABLE. IF DAMAGED THESE SHALL BE REPAIRED IMMEDIATELY BY A QUALIFIED CONTRACTOR AT THE CONTRACTOR'S OWN EXPENSE.
6. BUS STOPS WILL BE RELOCATED AT THE RESPONSIBILITY OF MTA PRIOR TO CONSTRUCTION.

7 CONTRACTOR SHALL MAINTAIN VISIBILITY TO ALL SIGNAL HEAD INDICATIONS BY KEEPING CONSTRUCTION EQUIPMENT BELOW THE STANDARD HEIGHT AND OUT OF THE CONE OF VISION FOR SIGNAL HEAD INDICATIONS.

8 CONTRACTOR SHALL MAINTAIN 5' MINIMUM ADA-COMPLIANT CROSSWALK/WALKWAY.

9 CONTRACTOR SHALL PROVIDE FLAGGER CONTROL TO MAINTAIN SAFE PEDESTRIAN ACCESS THRU THE CROSSWALK/WALKWAY.

WTCP – LA CIENEGA STATION – TC-SCE-11

DRAWN BY:
V&A INC.
530 S. HEWITT ST. SUITE 121
LOS ANGELES, CA 90013
213.972.9700

PARSONS BRINCKERHOFF
777 SOUTH FIGUEROA ST. 11TH FLOOR
LOS ANGELES, CA 90017

DIGALERT
CALL TOLL FREE
1-800-227-2600
2 Working Days Before You Dig

REGISTERED PROFESSIONAL ENGINEER
PEDRO DANILO R. PERY
No. C56181
Exp. 06/30/14
CIVIL
STATE OF CALIFORNIA
STAMP

REVISIONS

D CITY OF BEVERLY HILLS
ENGINEERING DEPARTMENT

DESIGNED BY	DRAWN BY	CHECKED BY	APPROVED BY
VH	VE	MG II	

SUBMITTED BY RCE No.
REVIEWED BY
ASSISTANT CITY ENGINEER DATE
ENGINEER DATE

Traffic Control:
WESTSIDE SUBWAY EXTENSION PROJECT
ADVANCED UTILITY RELOCATION
LA CIENEGA STATION
SCE STAGE 10

P.O No.
CIP No.
PROJECT No.
SHEET NO 11 OF 27

CADD PROJECT FILE NAME: P:\Westside Subway Extension\Design\Base\La Cienega\TC-SCE-11 SCE Stage 10.dwg Apr 01, 2014 3:56pm_vEncarnacion

END ROAD WORK
G20-2

RIGHT LANE MUST TURN RIGHT
R3-7(RT) 36" x 36"

W1-6(LT)
W1-6(RT) 48" x 24"

ROAD WORK AHEAD
W20-1 36" x 36"

RIGHT LANE CLOSED AHEAD
C20(CA)(RT) 36" x 36"

TURNING VEHICLES TO
R10-15

R9-3 18" x 18"

USE CROSSWALK
R9-3bP(LT) 18" x 12"

USE CROSSWALK
R9-3bP(RT) 18" x 12"

LANE CLOSED
C30 (CA)

SIDEWALK CLOSED
R9-9

SIDEWALK CLOSED CROSS HERE
R9-11a(LT)

SIDEWALK CLOSED AHEAD CROSS HERE
R9-11(LT)

SIDEWALK CLOSED AHEAD CROSS HERE
R9-11(RT)

ADDITIONAL NOTES:

1. REFER TO SHEET 1 FOR REQUIREMENTS REGARDING NOTIFICATION OF APPROPRIATE CITY AGENCIES.
2. THIS STAGE OF WORK WILL BE IMPLEMENTED BETWEEN THE HOURS OF 8PM TO 6AM (MONDAY TO FRIDAY) NIGHTLY FOR THE DURATION OF X DAYS (THE DURATION GIVEN FOR EACH STAGE IS PROVISIONAL AND MAY BE ADJUSTED BY THE CONTRACTOR FOLLOWING THEIR DETAILED CONSTRUCTION PLANNING AND THE AGREEMENT OF CITY OF BEVERLY HILLS). NOISE CAUSING ACTIVITIES TO CEASE AT 11PM.
3. DURING NON-WORKING HOURS, CONTRACTOR SHALL RESTORE CONDITIONS THAT WERE EXISTING PRIOR TO START OF THIS STAGE OF CONSTRUCTION. INCLUDING REMOVE CONES AND BARRICADES, COVER/UNCOVER SIGNS, AND STEEL PLATE ANY OPEN TRENCHES.
4. CONTRACTOR SHALL MAINTAIN ACCESS TO DRIVEWAYS AND LOCAL ACCESS TO RESIDENTS AT ALL TIMES.
5. CONTRACTOR SHALL PROTECT TRAFFIC SIGNAL DETECTOR LOOPS, BUS LOOPS, CONDUITS, INTERCONNECT, AND FIBER OPTIC CABLE. IF DAMAGED THESE SHALL BE REPAIRED IMMEDIATELY BY A QUALIFIED CONTRACTOR AT THE CONTRACTOR'S OWN EXPENSE.
6. BUS STOPS WILL BE RELOCATED AT THE RESPONSIBILITY OF MTA PRIOR TO CONSTRUCTION.

ADDITIONAL NOTES (CONT'D):

7 CONTRACTOR SHALL MAINTAIN 5' MINIMUM ADA-COMPLIANT CROSSWALK/WALKWAY.

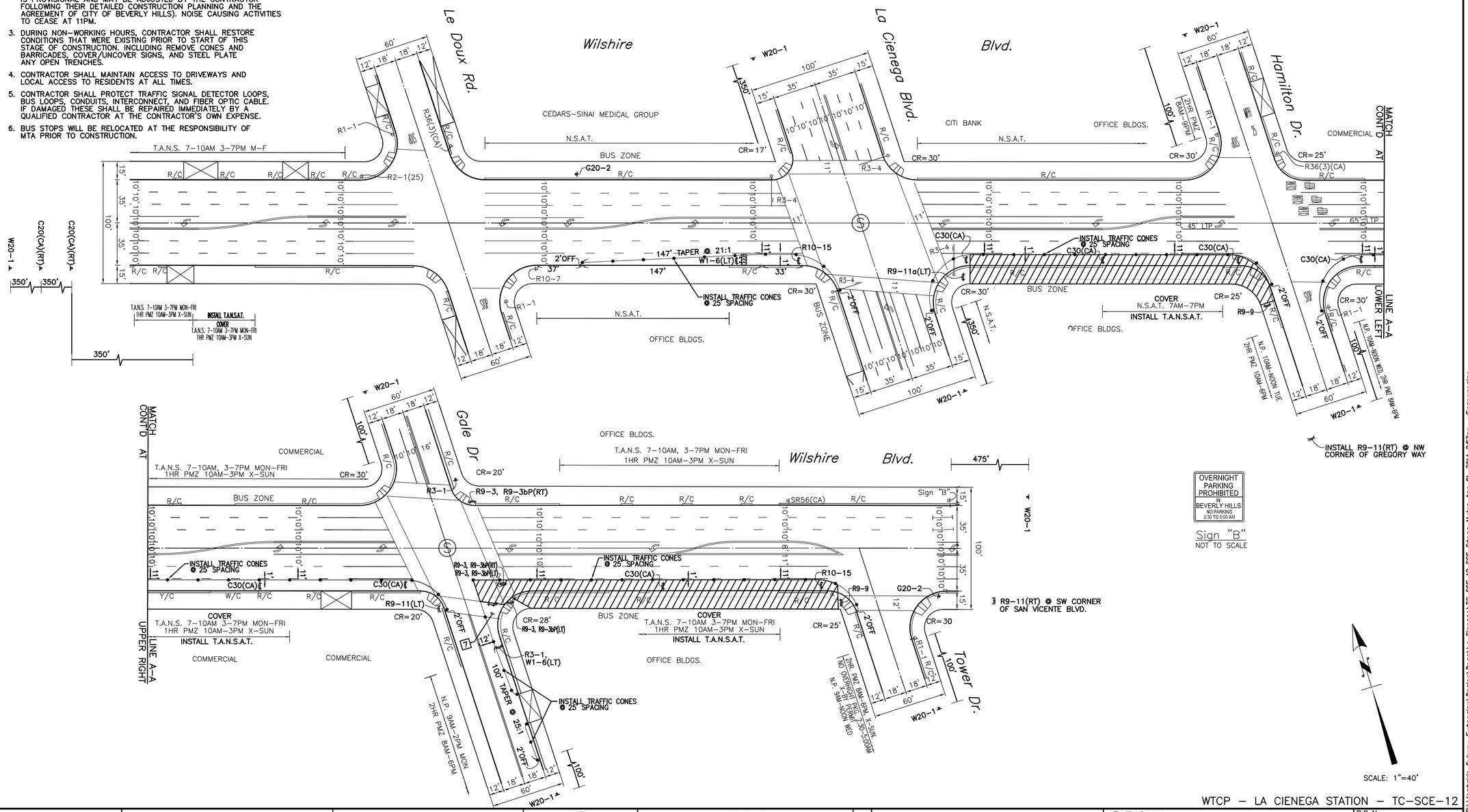

WTCP – LA CIENEGA STATION – TC-SCE-12

DRAWN BY:

V&A INC.
530 S. HEWITT ST. SUITE 121
LOS ANGELES, CA 90013
213.972.9700

PARSONS BRINCKERHOFF
777 SOUTH FIGUEROA ST. 11TH FLOOR
LOS ANGELES, CA 90017

DIGALERT
CALL TOLL FREE
1-800-227-2600
2 Working Days Before You Dig

REGISTERED PROFESSIONAL ENGINEER PEDRO DANILO R. PELEN No. C55121 Exp. 06/30/14 CIVIL STATE OF CALIFORNIA

STAMP

REVISIONS

D CITY OF BEVERLY HILLS
ENGINEERING DEPARTMENT

DESIGNED BY	DRAWN BY	CHECKED BY	APPROVED BY
VH	VE	MG II	

SUBMITTED BY RCE No.
REVIEWED BY ENGINEER DATE
ASSISTANT CITY ENGINEER DATE

Traffic Control:

WESTSIDE SUBWAY EXTENSION PROJECT
ADVANCED UTILITY RELOCATION
LA CIENEGA STATION
SCE STAGE 11

P.O No.
CIP No.
PROJECT No.
SHEET NO 12 OF 27

CADD PROJECT FILE NAME: P:\Westside Subway Extension\Design\Base\La Cienega\TC-SCE-12 SCE Stage 11.dwg Apr 01, 2014 3:57pm__vEncarnacion

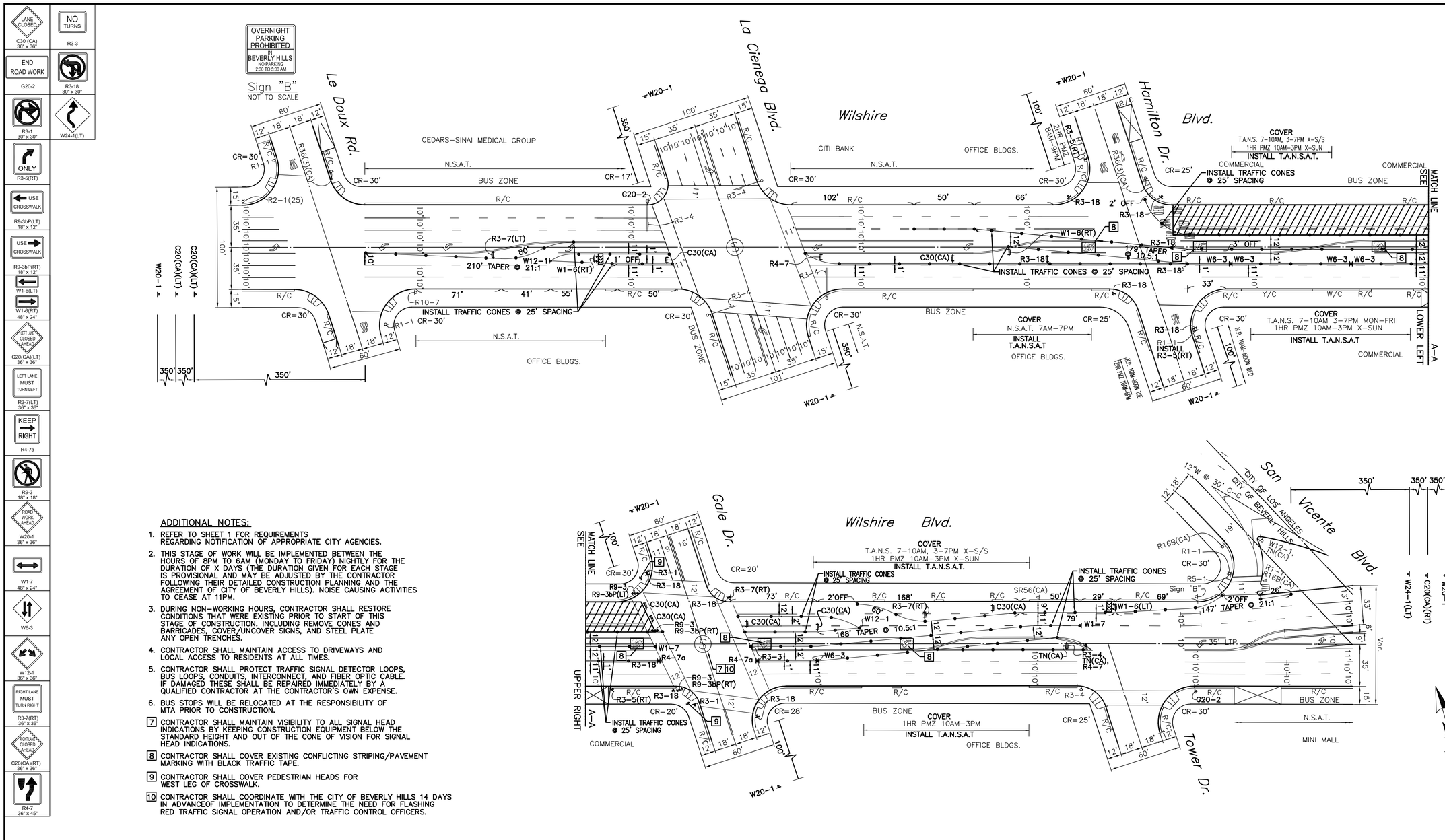

ADDITIONAL NOTES:

1. REFER TO SHEET 1 FOR REQUIREMENTS REGARDING NOTIFICATION OF APPROPRIATE CITY AGENCIES.
2. THIS STAGE OF WORK WILL BE IMPLEMENTED BETWEEN THE HOURS OF 8PM TO 6AM (MONDAY TO FRIDAY) NIGHTLY FOR THE DURATION OF X DAYS (THE DURATION GIVEN FOR EACH STAGE IS PROVISIONAL AND MAY BE ADJUSTED BY THE CONTRACTOR FOLLOWING THEIR DETAILED CONSTRUCTION PLANNING AND THE AGREEMENT OF CITY OF BEVERLY HILLS). NOISE CAUSING ACTIVITIES TO CEASE AT 11PM.
3. DURING NON-WORKING HOURS, CONTRACTOR SHALL RESTORE CONDITIONS THAT WERE EXISTING PRIOR TO START OF THIS STAGE OF CONSTRUCTION. INCLUDING REMOVE CONES AND BARRICADES, COVER/UNCOVER SIGNS, AND STEEL PLATE ANY OPEN TRENCHES.
4. CONTRACTOR SHALL MAINTAIN ACCESS TO DRIVEWAYS AND LOCAL ACCESS TO RESIDENTS AT ALL TIMES.
5. CONTRACTOR SHALL PROTECT TRAFFIC SIGNAL DETECTOR LOOPS, BUS LOOPS, CONDUITS, INTERCONNECT, AND FIBER OPTIC CABLE. IF DAMAGED THESE SHALL BE REPAIRED IMMEDIATELY BY A QUALIFIED CONTRACTOR AT THE CONTRACTOR'S OWN EXPENSE.
6. BUS STOPS WILL BE RELOCATED AT THE RESPONSIBILITY OF MTA PRIOR TO CONSTRUCTION.

7 CONTRACTOR SHALL MAINTAIN VISIBILITY TO ALL SIGNAL HEAD INDICATIONS BY KEEPING CONSTRUCTION EQUIPMENT BELOW THE STANDARD HEIGHT AND OUT OF THE CONE OF VISION FOR SIGNAL HEAD INDICATIONS.

8 CONTRACTOR SHALL COVER EXISTING CONFLICTING STRIPING/PAVEMENT MARKING WITH BLACK TRAFFIC TAPE.

9 CONTRACTOR SHALL COVER PEDESTRIAN HEADS FOR WEST LEG OF CROSSWALK.

10 CONTRACTOR SHALL COORDINATE WITH THE CITY OF BEVERLY HILLS 14 DAYS IN ADVANCEOF IMPLEMENTATION TO DETERMINE THE NEED FOR FLASHING RED TRAFFIC SIGNAL OPERATION AND/OR TRAFFIC CONTROL OFFICERS.

WTCP – LA CIENEGA STATION – TC-SCE-13

DRAWN BY:

V&A INC.
530 S. HEWITT ST. SUITE 121
LOS ANGELES, CA 90013
213.972.9700

PARSONS BRINCKERHOFF
777 SOUTH FIGUEROA ST. 11TH FLOOR
LOS ANGELES, CA 90017

DIGALERT
CALL TOLL FREE
1-800-227-2600
2 Working Days Before You Dig

REGISTERED PROFESSIONAL ENGINEER PEDRO DANILO R. PERRY No. C56181 Exp. 06/30/14 CIVIL STATE OF CALIFORNIA
STAMP

REVISIONS

D CITY OF BEVERLY HILLS
ENGINEERING DEPARTMENT

DESIGNED BY	DRAWN BY	CHECKED BY	APPROVED BY
VH	VE	MG II	

SUBMITTED BY RCE No.
REVIEWED BY
ASSISTANT CITY ENGINEER DATE
ENGINEER DATE

Traffic Control:

WESTSIDE SUBWAY EXTENSION PROJECT
ADVANCED UTILITY RELOCATION
LA CIENEGA STATION
SCE STAGE 12

P.O No.
CIP No.
PROJECT No.
SHEET NO 13 OF 27

CADD PROJECT FILE NAME: P:\Westside Subway Extension\Design\Base\La Cienega\TC-SCE-13 SCE Stage 12.dwg Apr 01, 2014 3:58pm_vEncarnacion

C30 (CA) 36" x 36"

W4-3 36" x 36"

END ROAD WORK — G20-2

ONE WAY — R6-1(RT) 36" x 12"

R3-18 30" x 30"

LEFT LANE MUST TURN LEFT — R3-7(LT) 36" x 36"

W1-6(LT)

W1-6(RT) 48" x 24"

W12-1 36" x 36"

ROAD WORK AHEAD — W20-1 36" x 36"

LEFT LANE CLOSED AHEAD — C20(CA)(LT) 36" x 36"

KEEP RIGHT — R4-7a

TYPE N(CA)TN(CA) (ORANGE) 18" x 18"

W6-3

W24-1(LT)

RIGHT LANE CLOSED AHEAD — C20(CA)(RT) 36" x 36"

R9-3a 18" x 18"

USE CROSSWALK — R9-3b(RT) 18" x 12"

USE CROSSWALK — R9-3b(LT) 18" x 12"

W1-7 48" x 24"

ONLY — R3-5(RT)

ADDITIONAL NOTES:

1. REFER TO SHEET 1 FOR REQUIREMENTS REGARDING NOTIFICATION OF APPROPRIATE CITY AGENCIES.
2. THIS STAGE OF WORK WILL BE IMPLEMENTED BETWEEN THE HOURS OF 8PM TO 6AM (MONDAY TO FRIDAY) NIGHTLY FOR THE DURATION OF X DAYS (THE DURATION GIVEN FOR EACH STAGE IS PROVISIONAL AND MAY BE ADJUSTED BY THE CONTRACTOR FOLLOWING THEIR DETAILED CONSTRUCTION PLANNING AND THE AGREEMENT OF CITY OF BEVERLY HILLS). NOISE CAUSING ACTIVITIES TO CEASE AT 11PM.
3. DURING NON-WORKING HOURS, CONTRACTOR SHALL RESTORE CONDITIONS THAT WERE EXISTING PRIOR TO START OF THIS STAGE OF CONSTRUCTION. INCLUDING REMOVE CONES AND BARRICADES, COVER/UNCOVER SIGNS, AND STEEL PLATE ANY OPEN TRENCHES.
4. CONTRACTOR SHALL MAINTAIN ACCESS TO DRIVEWAYS AND LOCAL ACCESS TO RESIDENTS AT ALL TIMES.
5. CONTRACTOR SHALL PROTECT TRAFFIC SIGNAL DETECTOR LOOPS, BUS LOOPS, CONDUITS, INTERCONNECT, AND FIBER OPTIC CABLE. IF DAMAGED THESE SHALL BE REPAIRED IMMEDIATELY BY A QUALIFIED CONTRACTOR AT THE CONTRACTOR'S OWN EXPENSE.
6. BUS STOPS WILL BE RELOCATED AT THE RESPONSIBILITY OF MTA PRIOR TO CONSTRUCTION.
7. CONTRACTOR SHALL MAINTAIN VISIBILITY TO ALL SIGNAL HEAD INDICATIONS BY KEEPING CONSTRUCTION EQUIPMENT BELOW THE STANDARD HEIGHT AND OUT OF THE CONE OF VISION FOR SIGNAL HEAD INDICATIONS.
8. CONTRACTOR SHALL COVER EXISTING CONFLICTING STRIPING/PAVEMENT MARKING WITH BLACK TRAFFIC TAPE.
9. CONTRACTOR SHALL COVER PEDESTRIAN HEADS FOR NORTH LEG OF CROSSWALK.
10. CONTRACTOR SHALL PROVIDE FLAGGER CONTROL TO MAINTAIN SAFE PEDESTRIAN ACCESS THRU THE CROSSWALK/WALKWAY.
11. CONTRACTOR SHALL COORDINATE WITH THE CITY OF BEVERLY HILLS 14 DAYS IN ADVANCE OF IMPLEMENTATION TO DETERMINE THE NEED FOR FLASHING RED TRAFFIC SIGNAL OPERATION AND/OR TRAFFIC CONTROL OFFICERS.
12. CONTRACTOR SHALL MAINTAIN 5' MINIMUM ADA-COMPLIANT CROSSWALK/WALKWAY.

OVERNIGHT PARKING PROHIBITED IN BEVERLY HILLS NO PARKING 2:30 TO 5:00 AM

Sign "B"

NOT TO SCALE

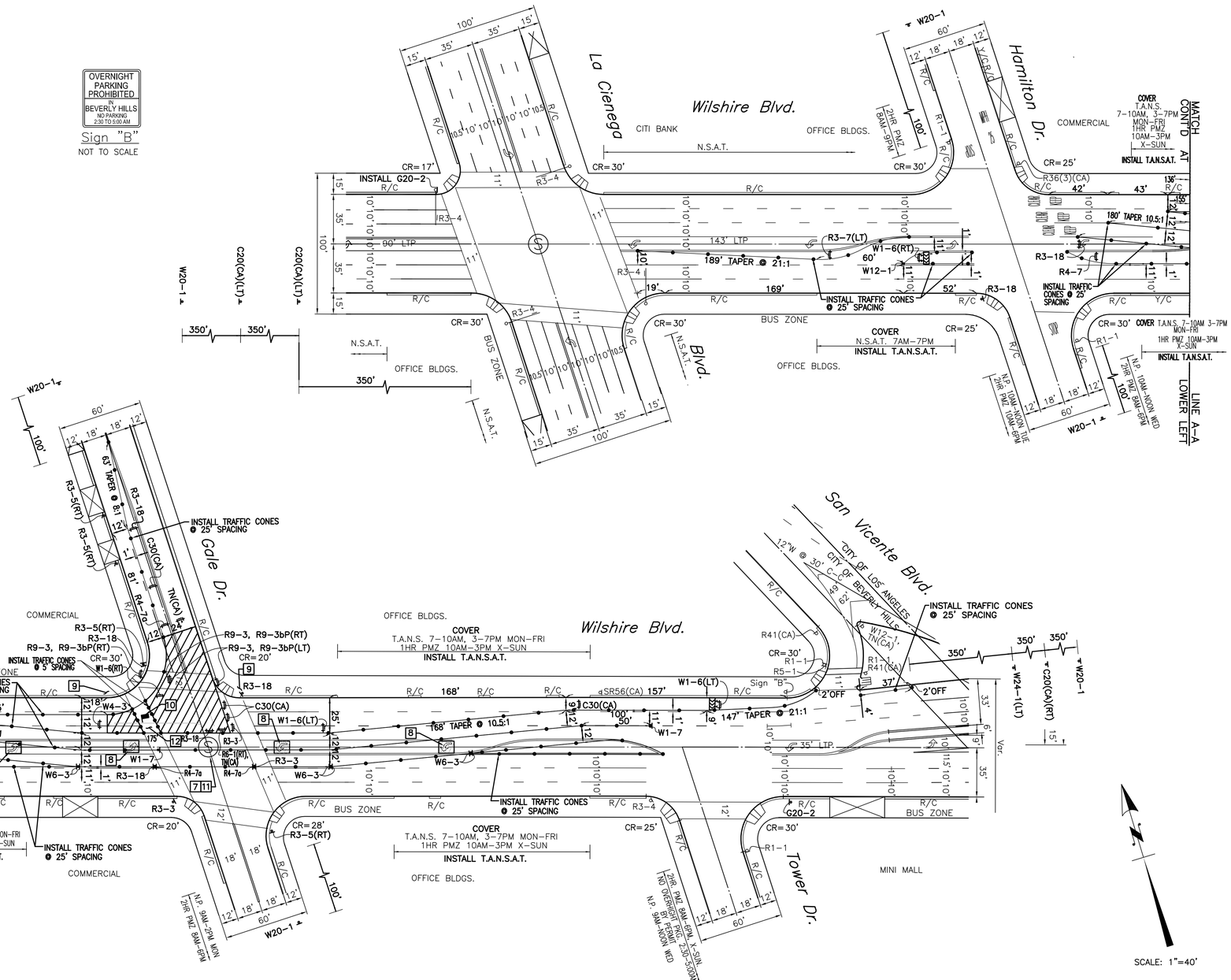

WTCP – LA CIENEGA STATION – TC-SCE-14

DRAWN BY:

V&A INC.
530 S. HEWITT ST. SUITE 121
LOS ANGELES, CA 90013
213.972.9700

PARSONS BRINCKERHOFF
777 SOUTH FIGUEROA ST. 11TH FLOOR
LOS ANGELES, CA 90017

DIGALERT
CALL TOLL FREE
1-800-227-2600
2 Working Days Before You Dig

REGISTERED PROFESSIONAL ENGINEER — PEDRO DANILO R. PERRY — No. C95181 — Exp. 06/30/14 — CIVIL — STATE OF CALIFORNIA

STAMP

REVISIONS

D

CITY OF BEVERLY HILLS
ENGINEERING DEPARTMENT

DESIGNED BY	DRAWN BY	CHECKED BY	APPROVED BY
VH	VE	MG II	

SUBMITTED BY — RCE No.

REVIEWED BY — ASSISTANT CITY ENGINEER — DATE

ENGINEER — DATE

Traffic Control:

WESTSIDE SUBWAY EXTENSION PROJECT
ADVANCED UTILITY RELOCATION
LA CIENEGA STATION
SCE STAGE 13

P.O No.

CIP No.

PROJECT No.

SHEET NO 14 OF 27

CADD PROJECT FILE NAME: P:\Westside Subway Extension\Design\Base\La Cienega\TC-SCE-14 SCE Stage 13.dwg Apr 01, 2014 3:59pm_vEncarnacion

C30 (CA) 36" x 36"

W1-7 48" x 24"

END ROAD WORK G20-2

R9-3a 18" x 18"

R3-18 30" x 30"

MAY USE FULL LANE R4-11

LEFT LANE MUST TURN LEFT R3-7(LT) 36" x 36"

SIDEWALK CLOSED AHEAD CROSS HERE R9-11(RT)

W1-6(LT)

W1-6(RT) 48" x 24"

ONE WAY R6-1(RT) 36" x 12"

W12-1 36" x 36"

ROAD WORK AHEAD W20-1 36" x 36"

LEFT LANE CLOSED AHEAD C20(CA)(LT) 36" x 36"

RIGHT LANE CLOSED AHEAD C20(CA)(RT) 36" x 36"

TYPE III(CA)/TN(CA) (ORANGE) 18" x 18"

R4-7 36" x 45"

W6-3

NO TURNS R3-3

ONLY R3-5(RT)

W24-1(LT)

R3-1 30" x 30"

W4-3 36" x 36"

TURNING VEHICLES 15' R10-15

ADDITIONAL NOTES:

1. REFER TO SHEET 1 FOR REQUIREMENTS REGARDING NOTIFICATION OF APPROPRIATE CITY AGENCIES.
2. THIS STAGE OF WORK WILL BE IMPLEMENTED BETWEEN THE HOURS OF 8PM TO 6AM (MONDAY TO FRIDAY) NIGHTLY FOR THE DURATION OF X DAYS (THE DURATION GIVEN FOR EACH STAGE IS PROVISIONAL AND MAY BE ADJUSTED BY THE CONTRACTOR FOLLOWING THEIR DETAILED CONSTRUCTION PLANNING AND THE AGREEMENT OF CITY OF BEVERLY HILLS). NOISE CAUSING ACTIVITIES TO CEASE AT 11PM.
3. DURING NON-WORKING HOURS, CONTRACTOR SHALL RESTORE CONDITIONS THAT WERE EXISTING PRIOR TO START OF THIS STAGE OF CONSTRUCTION. INCLUDING REMOVE CONES AND BARRICADES, COVER/UNCOVER SIGNS, AND STEEL PLATE ANY OPEN TRENCHES.
4. CONTRACTOR SHALL MAINTAIN ACCESS TO DRIVEWAYS AND LOCAL ACCESS TO RESIDENTS AT ALL TIMES.
5. CONTRACTOR SHALL PROTECT TRAFFIC SIGNAL DETECTOR LOOPS, BUS LOOPS, CONDUITS, INTERCONNECT, AND FIBER OPTIC CABLE. IF DAMAGED THESE SHALL BE REPAIRED IMMEDIATELY BY A QUALIFIED CONTRACTOR AT THE CONTRACTOR'S OWN EXPENSE.
6. BUS STOPS WILL BE RELOCATED AT THE RESPONSIBILITY OF MTA PRIOR TO CONSTRUCTION.

7 CONTRACTOR SHALL COVER EXISTING CONFLICTING STRIPING/PAVEMENT MARKING WITH BLACK TRAFFIC TAPE.

LEFT TURN CLOSED AT LA CIENEGA

DETAIL "K"
TO BE IN OPERATION DURING CLOSURE

OVERNIGHT PARKING PROHIBITED IN BEVERLY HILLS NO PARKING 2:30 TO 5:00 AM

Sign "B"
NOT TO SCALE

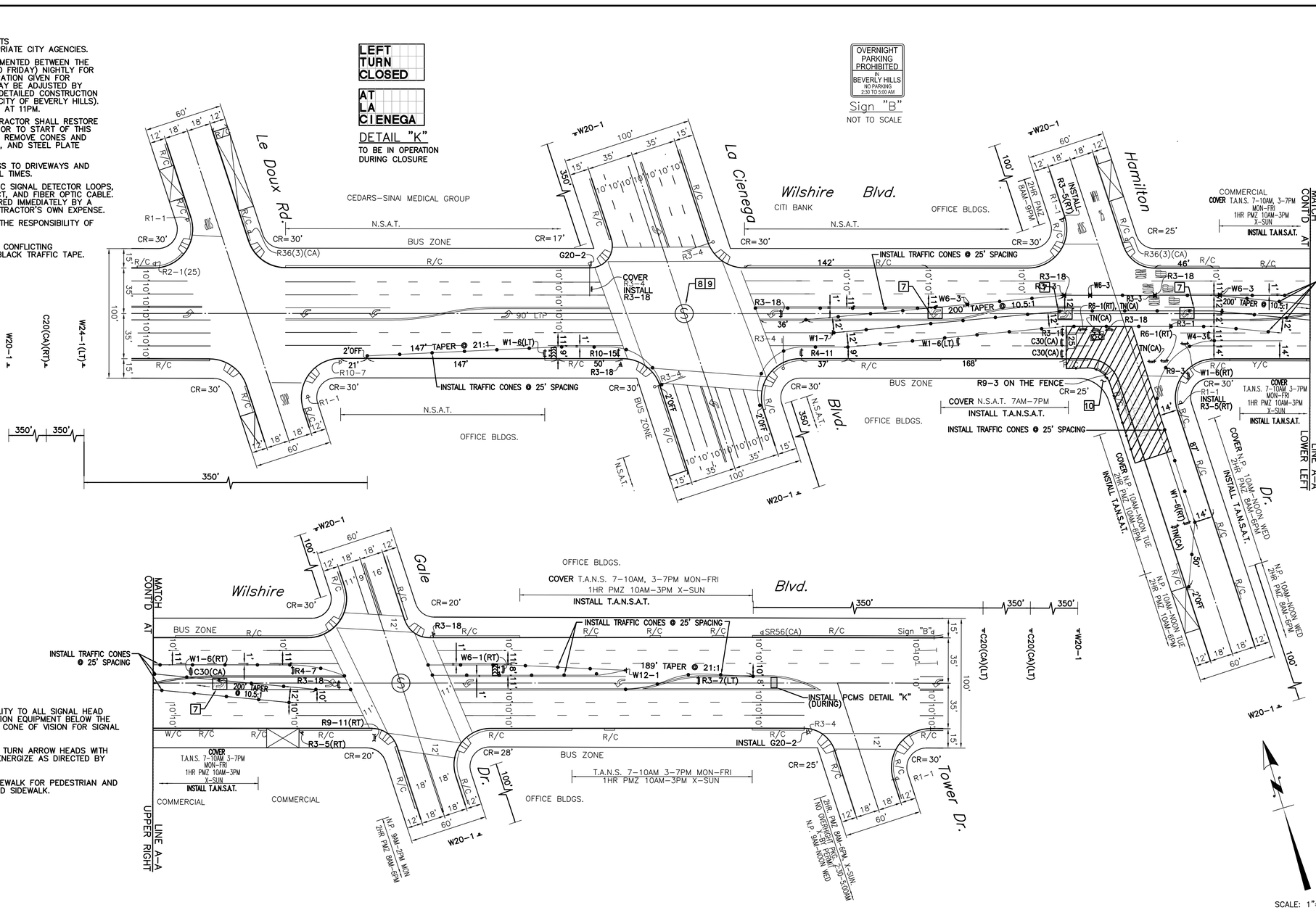

ADDITIONAL NOTES (CONT'D):

8 CONTRACTOR SHALL MAINTAIN VISIBILITY TO ALL SIGNAL HEAD INDICATIONS BY KEEPING CONSTRUCTION EQUIPMENT BELOW THE STANDARD HEIGHT AND OUT OF THE CONE OF VISION FOR SIGNAL HEAD INDICATIONS.

9 CONTRACTOR SHALL COVER WB LEFT TURN ARROW HEADS WITH DETACHABLE HEAD COVER AND DE-ENERGIZE AS DIRECTED BY TRAFFIC SIGNAL INSPECTORS.

10 CONTRACTOR SHALL MAINTAIN 6' SIDEWALK FOR PEDESTRIAN AND INSTALL FENCE ALONG THE PROPOSED SIDEWALK.

WTCP – LA CIENEGA STATION – TC-SCE-15

DRAWN BY:
V&A INC.
530 S. HEWITT ST. SUITE 121
LOS ANGELES, CA 90013
213.972.9700

PARSONS BRINCKERHOFF
777 SOUTH FIGUEROA ST. 11TH FLOOR
LOS ANGELES, CA 90017

DIGALERT
CALL TOLL FREE
1-800-227-2600
2 Working Days Before You Dig

REGISTERED PROFESSIONAL ENGINEER PEDRO DANILO R. PERY No. C56181 Exp. 06/30/14 CIVIL STATE OF CALIFORNIA
STAMP

REVISIONS

D CITY OF BEVERLY HILLS
ENGINEERING DEPARTMENT

DESIGNED BY	DRAWN BY	CHECKED BY	APPROVED BY
VH	VE	MG II	

SUBMITTED BY RCE No.
REVIEWED BY
ASSISTANT CITY ENGINEER DATE
ENGINEER DATE

Traffic Control:

WESTSIDE SUBWAY EXTENSION PROJECT
ADVANCED UTILITY RELOCATION
LA CIENEGA STATION
SCE STAGE 14

P.O No.
CIP No.
PROJECT No.
SHEET NO 15 OF 27

CADD PROJECT FILE NAME: P:\Westside Subway Extension\Design\Base\La Cienega\TC-SCE-15 SCE Stage 14.dwg Apr 01, 2014 3:59pm_vEncarnacion

ADDITIONAL NOTES:

1. REFER TO SHEET 1 FOR REQUIREMENTS REGARDING NOTIFICATION OF APPROPRIATE CITY AGENCIES.
2. THIS STAGE OF WORK WILL BE IMPLEMENTED BETWEEN THE HOURS OF 8PM TO 6AM (MONDAY TO FRIDAY) NIGHTLY FOR DURATION OF XX DAYS (THE DURATION GIVEN FOR EACH STAGE IS PROVISIONAL AND MAY BE ADJUSTED BY THE CONTRACTOR FOLLOWING THEIR DETAILED CONSTRUCTION PLANNING AND THE AGREEMENT OF CITY OF BEVERLY HILLS). NOISE CAUSING ACTIVITIES TO CEASE AT 11PM.
3. DURING NON-WORKING HOURS, CONTRACTOR SHALL RESTORE CONDITIONS THAT WERE EXISTING PRIOR TO START OF THIS STAGE OF CONSTRUCTION. INCLUDING REMOVE CONES AND BARRICADES, COVER/UNCOVER SIGNS, AND STEEL PLATE ANY OPEN TRENCHES.
4. CONTRACTOR SHALL MAINTAIN ACCESS TO DRIVEWAYS AND LOCAL ACCESS TO RESIDENTS AT ALL TIMES.
5. CONTRACTOR SHALL PROTECT TRAFFIC SIGNAL DETECTOR LOOPS, BUS LOOPS, CONDUITS, INTERCONNECT, AND FIBER OPTIC CABLE. IF DAMAGED THESE SHALL BE REPAIRED IMMEDIATELY BY A QUALIFIED CONTRACTOR AT THE CONTRACTOR'S OWN EXPENSE.
6. BUS STOPS WILL BE RELOCATED AT THE RESPONSIBILITY OF MTA PRIOR TO CONSTRUCTION.
7. CONTRACTOR SHALL MAINTAIN VISIBILITY TO ALL SIGNAL HEAD INDICATIONS BY KEEPING CONSTRUCTION EQUIPMENT BELOW THE STANDARD HEIGHT AND OUT OF THE CONE OF VISION FOR SIGNAL HEAD INDICATIONS.
8. CONTRACTOR SHALL COVER EXISTING CONFLICTING STRIPING/PAVEMENT MARKING WITH BLACK TRAFFIC TAPE.
9. CONTRACTOR SHALL COVER PEDESTRIAN HEADS FOR SOUTH LEG OF CROSSWALK.
10. CONTRACTOR SHALL MAINTAIN 5' MINIMUM ADA-COMPLIANT CROSSWALK/WALKWAY.
11. CONTRACTOR SHALL PROVIDE FLAGGER CONTROL TO MAINTAIN SAFE PEDESTRIAN ACCESS THRU THE CROSSWALK/WALKWAY.
12. CONTRACTOR SHALL MAINTAIN 6' SIDEWALK FOR PEDESTRIAN AND INSTALL FENCE ALONG THE PROPOSED SIDEWALK.
13. CONTRACTOR SHALL COORDINATE WITH THE CITY OF BEVERLY HILLS 14 DAYS IN ADVANCE OF IMPLEMENTATION TO DETERMINE THE NEED FOR FLASHING RED TRAFFIC SIGNAL OPERATION AND/OR TRAFFIC CONTROL OFFICERS.

NB GALE WILL BE CLOSED AT WILSHIRE BLVD

XX/XX-XX/XX (TIME)

DETAIL "C"
TO BE IN OPERATION ONE WEEK PRIOR TO CLOSURE

GALE DR CLOSED AT WILSHIRE BLVD

LOCAL ACCESS ONLY

DETAIL "D"
TO BE IN OPERATION DURING CLOSURE

OVERNIGHT PARKING PROHIBITED BY BEVERLY HILLS NO PARKING 2:30 TO 5:00 AM

Sign "B"
NOT TO SCALE

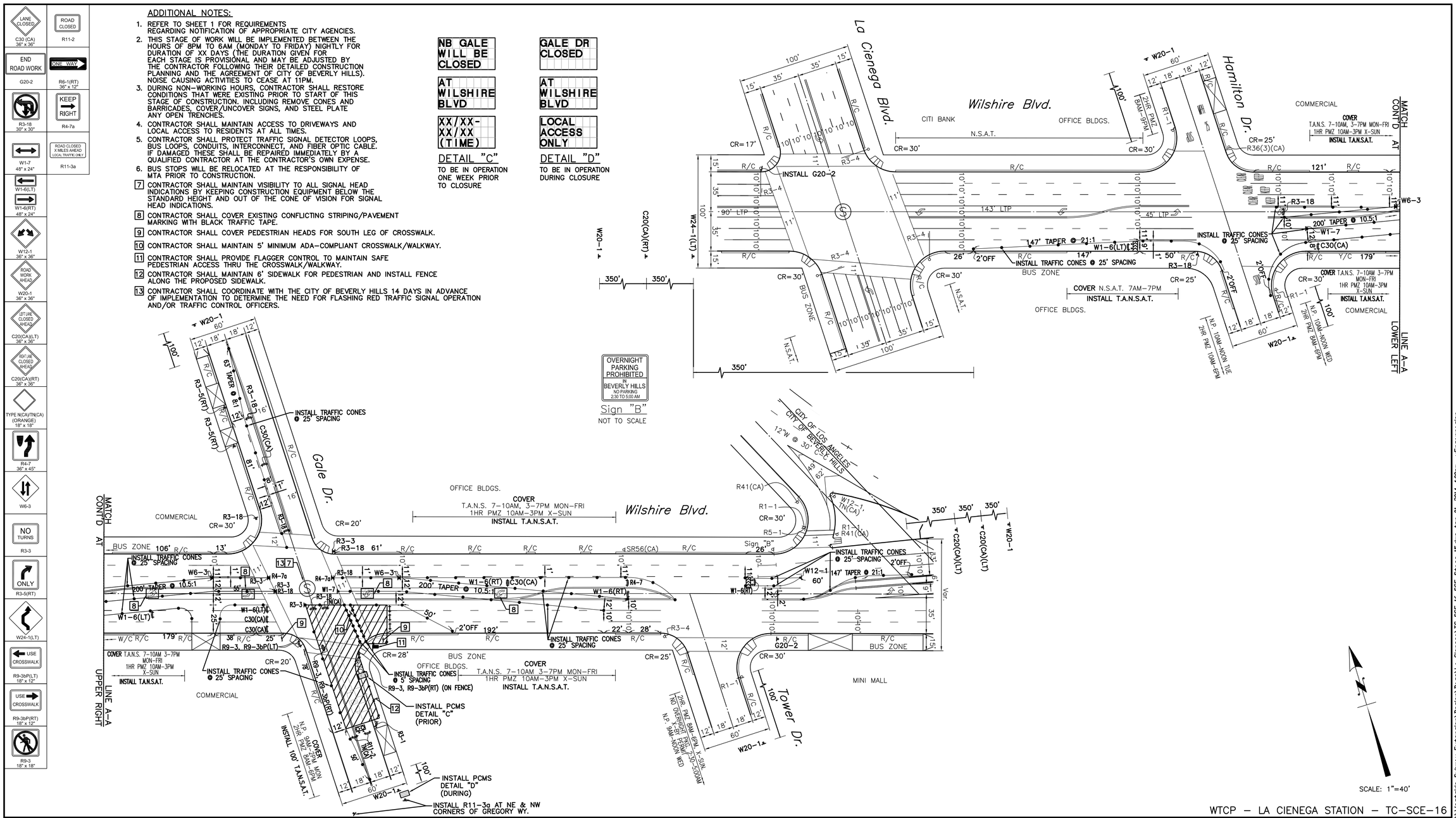

WTCP – LA CIENEGA STATION – TC-SCE-16

DRAWN BY:
V&A INC.
530 S. HEWITT ST. SUITE 121
LOS ANGELES, CA 90013
213.972.9700

PARSONS BRINCKERHOFF
777 SOUTH FIGUEROA ST. 11TH FLOOR
LOS ANGELES, CA 90017

DIGALERT
CALL TOLL FREE
1-800-227-2600
2 Working Days Before You Dig

REGISTERED PROFESSIONAL ENGINEER PEDRO DANILO R. PERRY No. C56181 Exp. 06/30/14 CIVIL STATE OF CALIFORNIA
STAMP

REVISIONS

D CITY OF BEVERLY HILLS
ENGINEERING DEPARTMENT

DESIGNED BY	DRAWN BY	CHECKED BY	APPROVED BY
VH	VE	MG II	

SUBMITTED BY RCE No.
REVIEWED BY
ASSISTANT CITY ENGINEER DATE
ENGINEER DATE

Traffic Control:

WESTSIDE SUBWAY EXTENSION PROJECT
ADVANCED UTILITY RELOCATION
LA CIENEGA STATION
SCE STAGE 15

P.O No.
CIP No.
PROJECT No.
SHEET NO 16 OF 27

CADD PROJECT FILE NAME: P:\Westside Subway Extension\Design\Base\La Cienega\TC-SCE-16 SCE Stage 15.dwg Apr 01, 2014 4:00pm_vEncarnacion

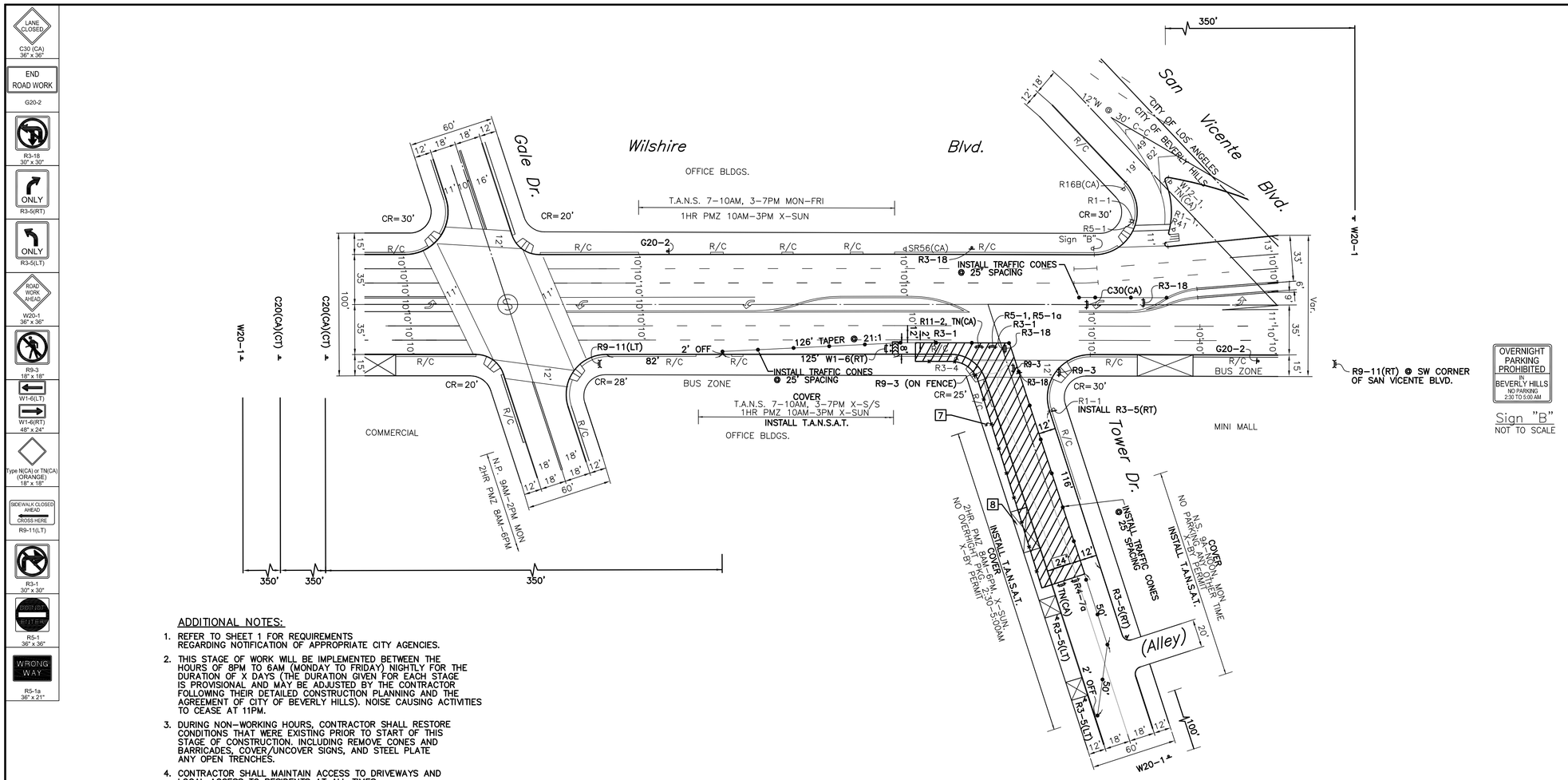

R9-11(RT) @ SW CORNER OF SAN VICENTE BLVD.

OVERNIGHT PARKING PROHIBITED IN BEVERLY HILLS NO PARKING 2:30 TO 5:00 AM

Sign "B"
NOT TO SCALE

SCALE: 1"=40'

WTCP – LA CIENEGA STATION – TC-SCE-17

ADDITIONAL NOTES:

1. REFER TO SHEET 1 FOR REQUIREMENTS REGARDING NOTIFICATION OF APPROPRIATE CITY AGENCIES.
2. THIS STAGE OF WORK WILL BE IMPLEMENTED BETWEEN THE HOURS OF 8PM TO 6AM (MONDAY TO FRIDAY) NIGHTLY FOR THE DURATION OF X DAYS (THE DURATION GIVEN FOR EACH STAGE IS PROVISIONAL AND MAY BE ADJUSTED BY THE CONTRACTOR FOLLOWING THEIR DETAILED CONSTRUCTION PLANNING AND THE AGREEMENT OF CITY OF BEVERLY HILLS). NOISE CAUSING ACTIVITIES TO CEASE AT 11PM.
3. DURING NON-WORKING HOURS, CONTRACTOR SHALL RESTORE CONDITIONS THAT WERE EXISTING PRIOR TO START OF THIS STAGE OF CONSTRUCTION, INCLUDING REMOVE CONES AND BARRICADES, COVER/UNCOVER SIGNS, AND STEEL PLATE ANY OPEN TRENCHES.
4. CONTRACTOR SHALL MAINTAIN ACCESS TO DRIVEWAYS AND LOCAL ACCESS TO RESIDENTS AT ALL TIMES.
5. CONTRACTOR SHALL PROTECT TRAFFIC SIGNAL DETECTOR LOOPS, BUS LOOPS, CONDUITS, INTERCONNECT, AND FIBER OPTIC CABLE. IF DAMAGED THESE SHALL BE REPAIRED IMMEDIATELY BY A QUALIFIED CONTRACTOR AT THE CONTRACTOR'S OWN EXPENSE.
6. BUS STOPS WILL BE RELOCATED AT THE RESPONSIBILITY OF MTA PRIOR TO CONSTRUCTION.

[7] CONTRACTOR SHALL MAINTAIN 6' SIDEWALK FOR PEDESTRIAN AND INSTALL FENCE ALONG THE PROPOSED SIDEWALK.

[8] CONTRACTOR SHALL ARRANGE WITH PROPERTY OWNER TO TEMPORARILY CLOSE DRIVEWAY DURING THIS STAGE OF CONSTRUCTION.

LANE CLOSED — C30 (CA) 36" x 36"
END ROAD WORK — G20-2
R3-18 30" x 30"
ONLY — R3-5(RT)
ONLY — R3-5(LT)
ROAD WORK AHEAD — W20-1 36" x 36"
R9-3 18" x 18"
W1-6(LT)
W1-6(RT) 48" x 24"
Type N(CA) or TN(CA) (ORANGE) 18" x 18"
SIDEWALK CLOSED AHEAD / CROSS HERE — R9-11(LT)
R3-1 30" x 30"
DO NOT ENTER — R5-1 36" x 36"
WRONG WAY — R5-1a 36" x 21"

DRAWN BY:
V&A INC.
530 S. HEWITT ST. SUITE 121
LOS ANGELES, CA 90013
213.972.9700

PARSONS BRINCKERHOFF
777 SOUTH FIGUEROA ST. 11TH FLOOR
LOS ANGELES, CA 90017

DIGALERT
CALL TOLL FREE
1-800-227-2600
2 Working Days Before You Dig

REGISTERED PROFESSIONAL ENGINEER — PEDRO DANILO R. PEJEN — No. C56181 — Exp. 06/30/14 — CIVIL — STATE OF CALIFORNIA
STAMP

REVISIONS

D — CITY OF BEVERLY HILLS
ENGINEERING DEPARTMENT
DESIGNED BY VH | DRAWN BY VE | CHECKED BY MG II | APPROVED BY
SUBMITTED BY RCE No.
REVIEWED BY
ASSISTANT CITY ENGINEER DATE
ENGINEER DATE

Traffic Control:
WESTSIDE SUBWAY EXTENSION PROJECT
ADVANCED UTILITY RELOCATION
LA CIENEGA STATION
SCE STAGE 16

P.O No.
CIP No.
PROJECT No.
SHEET NO 17 OF 27

CADD PROJECT FILE NAME: P:\Westside Subway Extension\Design\Base\La Cienega\TC-SCE-17 SCE Stage 16.dwg Apr 01, 2014 4:01pm_vEncarnacion

ADDITIONAL NOTES:

1. REFER TO SHEET 1 FOR REQUIREMENTS REGARDING NOTIFICATION OF APPROPRIATE CITY AGENCIES.
2. THIS STAGE OF WORK WILL BE IMPLEMENTED BETWEEN THE HOURS OF 8PM TO 6AM (MONDAY TO FRIDAY) DAILY FOR THE DURATION OF XX DAYS (THE DURATION GIVEN FOR EACH STAGE IS PROVISIONAL AND MAY BE ADJUSTED BY THE CONTRACTOR FOLLOWING THEIR DETAILED CONSTRUCTION PLANNING AND THE AGREEMENT OF CITY OF BEVERLY HILLS). NOISE CAUSING ACTIVITIES TO CEASE AT 11PM.
3. DURING NON-WORKING HOURS, CONTRACTOR SHALL RESTORE CONDITIONS THAT WERE EXISTING PRIOR TO START OF THIS STAGE OF CONSTRUCTION. INCLUDING REMOVE CONES AND BARRICADES, COVER/UNCOVER SIGNS, AND STEEL PLATE ANY OPEN TRENCHES.
4. CONTRACTOR SHALL MAINTAIN ACCESS TO DRIVEWAYS AND LOCAL ACCESS TO RESIDENTS AT ALL TIMES.
5. CONTRACTOR SHALL PROTECT TRAFFIC SIGNAL DETECTOR LOOPS, BUS LOOPS, CONDUITS, INTERCONNECT, AND FIBER OPTIC CABLE. IF DAMAGED THESE SHALL BE REPAIRED IMMEDIATELY BY A QUALIFIED CONTRACTOR AT THE CONTRACTOR'S OWN EXPENSE.
6. BUS STOPS WILL BE RELOCATED AT THE RESPONSIBILITY OF MTA PRIOR TO CONSTRUCTION.
7. REFER TO TC-SCE-22 FOR EB WILSHIRE CLOSURE DETOUR.

WILSHIRE
BLVD
CLOSED

AT
SAN
VICENTE

USE
ALT
ROUTE

DETAIL "U"

TO BE IN OPERATION DURING CLOSURE

WILSHIRE
BLVD
CLOSED

AT
SAN
VICENTE

USE
DETOUR

DETAIL "R"

TO BE IN OPERATION DURING CLOSURE

SCALE: 1"=40'

WTCP – LA CIENEGA STATION – TC-SCE-18

DRAWN BY:
V&A INC.
530 S. HEWITT ST. SUITE 121
LOS ANGELES, CA 90013
213.972.9700

PARSONS BRINCKERHOFF
777 SOUTH FIGUEROA ST. 11TH FLOOR
LOS ANGELES, CA 90017

DIGALERT
CALL TOLL FREE
1-800-227-2600
2 Working Days Before You Dig

REGISTERED PROFESSIONAL ENGINEER
PEDRO DANILO R. PELEN
No. C55121
Exp. 06/30/14
CIVIL
STATE OF CALIFORNIA
STAMP

REVISIONS

D

CITY OF BEVERLY HILLS
ENGINEERING DEPARTMENT

DESIGNED BY	DRAWN BY	CHECKED BY	APPROVED BY
VH	VE	MG II	

SUBMITTED BY RCE No.
REVIEWED BY
ASSISTANT CITY ENGINEER DATE
ENGINEER DATE

Traffic Control:

WESTSIDE SUBWAY EXTENSION PROJECT
ADVANCED UTILITY RELOCATION
LA CIENEGA STATION
SCE STAGE 17

P.O No.
CIP No.
PROJECT No.
SHEET NO 18 OF 27

CADD PROJECT FILE NAME: P:\Westside Subway Extension\Design\Base\La Cienega\TC-SCE-18 SCE Stage 17.dwg Apr 01, 2014 4:02pm__vEncarnacion

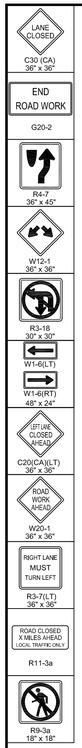

ADDITIONAL NOTES:

1. REFER TO SHEET 1 FOR REQUIREMENTS REGARDING NOTIFICATION OF APPROPRIATE CITY AGENCIES.
2. THIS STAGE OF WORK WILL BE IMPLEMENTED BETWEEN THE HOURS OF 8PM TO 6AM (MONDAY TO FRIDAY) NIGHTLY FOR THE DURATION OF XX DAYS (THE DURATION GIVEN FOR EACH STAGE IS PROVISIONAL AND MAY BE ADJUSTED BY THE CONTRACTOR FOLLOWING THEIR DETAILED CONSTRUCTION PLANNING AND THE AGREEMENT OF CITY OF BEVERLY HILLS). NOISE CAUSING ACTIVITIES TO CEASE AT 11PM.
3. DURING NON-WORKING HOURS, CONTRACTOR SHALL RESTORE CONDITIONS THAT WERE EXISTING PRIOR TO START OF THIS STAGE OF CONSTRUCTION. INCLUDING REMOVE CONES AND BARRICADES, COVER/UNCOVER SIGNS, AND STEEL PLATE ANY OPEN TRENCHES.
4. CONTRACTOR SHALL MAINTAIN ACCESS TO DRIVEWAYS AND LOCAL ACCESS TO RESIDENTS AT ALL TIMES.
5. CONTRACTOR SHALL PROTECT TRAFFIC SIGNAL DETECTOR LOOPS, BUS LOOPS, CONDUITS, INTERCONNECT, AND FIBER OPTIC CABLE. IF DAMAGED THESE SHALL BE REPAIRED IMMEDIATELY BY A QUALIFIED CONTRACTOR AT THE CONTRACTOR'S OWN EXPENSE.
6. BUS STOPS WILL BE RELOCATED AT THE RESPONSIBILITY OF MTA PRIOR TO CONSTRUCTION.
7. REFER TO TC-SCE-22 FOR EB WILSHIRE CLOSURE DETOUR.

[8] CONTRACTOR SHALL ARRANGE WITH PROPERTY OWNER TO TEMPORARILY CLOSE DRIVEWAY DURING THIS STAGE OF CONSTRUCTION.

TOWER DR WILL BE CLOSED AT WILSHIRE BLVD XX/XX-XX/XX 8PM-6AM

DETAIL "I"
TO BE IN OPERATION ONE WEEK PRIOR TO CLOSURE

TOWER DR CLOSED AT WILSHIRE BLVD LOCAL ACCESS ONLY

DETAIL "J"
TO BE IN OPERATION DURING CLOSURE

WILSHIRE WILL BE CLOSED AT SAN VICENTE XX/XX-XX/XX (TIME)

DETAIL "P"
TO BE IN OPERATION ONE WEEK PRIOR TO CLOSURE

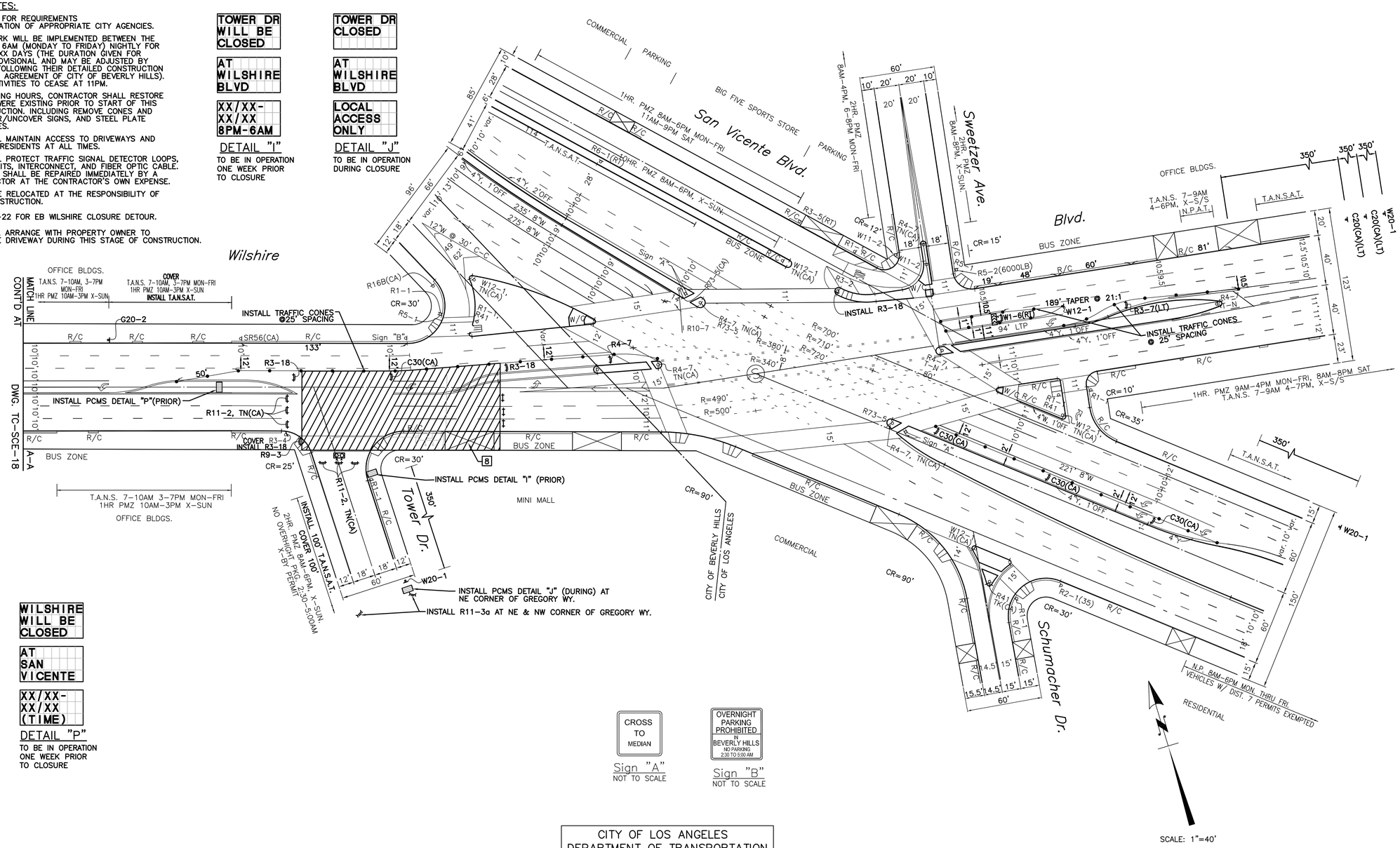

CROSS TO MEDIAN
Sign "A"
NOT TO SCALE

OVERNIGHT PARKING PROHIBITED IN BEVERLY HILLS NO PARKING 2:30 TO 5:00 AM
Sign "B"
NOT TO SCALE

CITY OF LOS ANGELES
DEPARTMENT OF TRANSPORTATION
ACCEPTED
PRINCIPAL TRANSPORTATION ENGINEER
DATE

WTCP – LA CIENEGA STATION – TC-SCE-19

DRAWN BY:
V&A INC.
530 S. HEWITT ST. SUITE 121
LOS ANGELES, CA 90013
213.972.9700

PARSONS BRINCKERHOFF
777 SOUTH FIGUEROA ST. 11TH FLOOR
LOS ANGELES, CA 90017

DIGALERT
CALL TOLL FREE
1-800-227-2600
2 Working Days Before You Dig

REGISTERED PROFESSIONAL ENGINEER PEDRO DANILO B. PEREZ No. C56181 Exp. 06/30/14 CIVIL STATE OF CALIFORNIA
STAMP

REVISIONS

D CITY OF BEVERLY HILLS
ENGINEERING DEPARTMENT

DESIGNED BY	DRAWN BY	CHECKED BY	APPROVED BY
VY	VE	MG II	

SUBMITTED BY RCE No.
REVIEWED BY
ASSISTANT CITY ENGINEER DATE
ENGINEER DATE

Traffic Control:

WESTSIDE SUBWAY EXTENSION PROJECT
ADVANCED UTILITY RELOCATION
LA CIENEGA STATION
SCE STAGE 17

P.O No.
CIP No.
PROJECT No.
SHEET NO 19 OF 27

CADD PROJECT FILE NAME: P:\Westside Subway Extension\Design\Base\La Cienega\TC-SCE-19 SCE Stage 17.dwg Apr 01, 2014 2:53pm_vEncarnacion

LANE CLOSED — C30 (CA) 36" x 36"

SIDEWALK CLOSED — R9-9

EXPECT DELAYS — R5-1 36" x 36"

DETOUR — M4-10(RT)

R3-18 30" x 30"

LEFT LANE MUST TURN LEFT — R3-7(LT) 36" x 36"

W1-6(LT)

W1-6(RT) 48" x 24"

W12-1 36" x 36"

ROAD WORK AHEAD — W20-1 36" x 36"

LEFT LANE CLOSED AHEAD — C20(CA)(LT) 36" x 36"

SIDEWALK CLOSED CROSS HERE — R9-11a(RT)

TYPE IV(CA)/TN(CA) (ORANGE) 18" x 18"

SIDEWALK CLOSED AHEAD CROSS HERE — R9-11(LT)

WILSHIRE WILL BE CLOSED AT SAN VICENTE XX/XX-XX/XX (TIME)

DETAIL "P"

TO BE IN OPERATION ONE WEEK PRIOR TO CLOSURE

WILSHIRE BLVD CLOSED AT SAN VICENTE USE DETOUR

DETAIL "Q"

TO BE IN OPERATION DURING CLOSURE

ADDITIONAL NOTES:

1. REFER TO SHEET 1 FOR REQUIREMENTS REGARDING NOTIFICATION OF APPROPRIATE CITY AGENCIES.
2. THIS STAGE OF WORK WILL BE IMPLEMENTED BETWEEN THE HOURS OF 8PM TO 6AM (MONDAY TO FRIDAY) NIGHTLY FOR THE DURATION OF 12 DAYS (THE DURATION GIVEN FOR EACH STAGE IS PROVISIONAL AND MAY BE ADJUSTED BY THE CONTRACTOR FOLLOWING THEIR DETAILED CONSTRUCTION PLANNING AND THE AGREEMENT OF CITY OF BEVERLY HILLS). NOISE CAUSING ACTIVITIES TO CEASE AT 11PM.
3. DURING NON-WORKING HOURS, CONTRACTOR SHALL RESTORE CONDITIONS THAT WERE EXISTING PRIOR TO START OF THIS STAGE OF CONSTRUCTION. INCLUDING REMOVE CONES AND BARRICADES, COVER/UNCOVER SIGNS, AND STEEL PLATE ANY OPEN TRENCHES.
4. CONTRACTOR SHALL MAINTAIN ACCESS TO DRIVEWAYS AND LOCAL ACCESS TO RESIDENTS AT ALL TIMES.
5. CONTRACTOR SHALL PROTECT TRAFFIC SIGNAL DETECTOR LOOPS, BUS LOOPS, CONDUITS, INTERCONNECT, AND FIBER OPTIC CABLE. IF DAMAGED THESE SHALL BE REPAIRED IMMEDIATELY BY A QUALIFIED CONTRACTOR AT THE CONTRACTOR'S OWN EXPENSE.
6. BUS STOPS WILL BE RELOCATED AT THE RESPONSIBILITY OF MTA PRIOR TO CONSTRUCTION.
7. CONTRACTOR SHALL MAINTAIN 5' MINIMUM ADA-COMPLIANT CROSSWALK/WALKWAY.
8. CONTRACTOR SHALL PROVIDE FLAGGER CONTROL TO MAINTAIN SAFE PEDESTRIAN ACCESS THRU THE CROSSWALK/WALKWAY.
9. CONTRACTOR SHALL MAINTAIN VISIBILITY TO ALL SIGNAL HEAD INDICATIONS BY KEEPING CONSTRUCTION EQUIPMENT BELOW THE STANDARD HEIGHT AND OUT OF THE CONE OF VISION FOR SIGNAL HEAD INDICATIONS.
10. REFER TO TC-SCE-22 FOR WB WILSHIRE CLOSURE DETOUR.

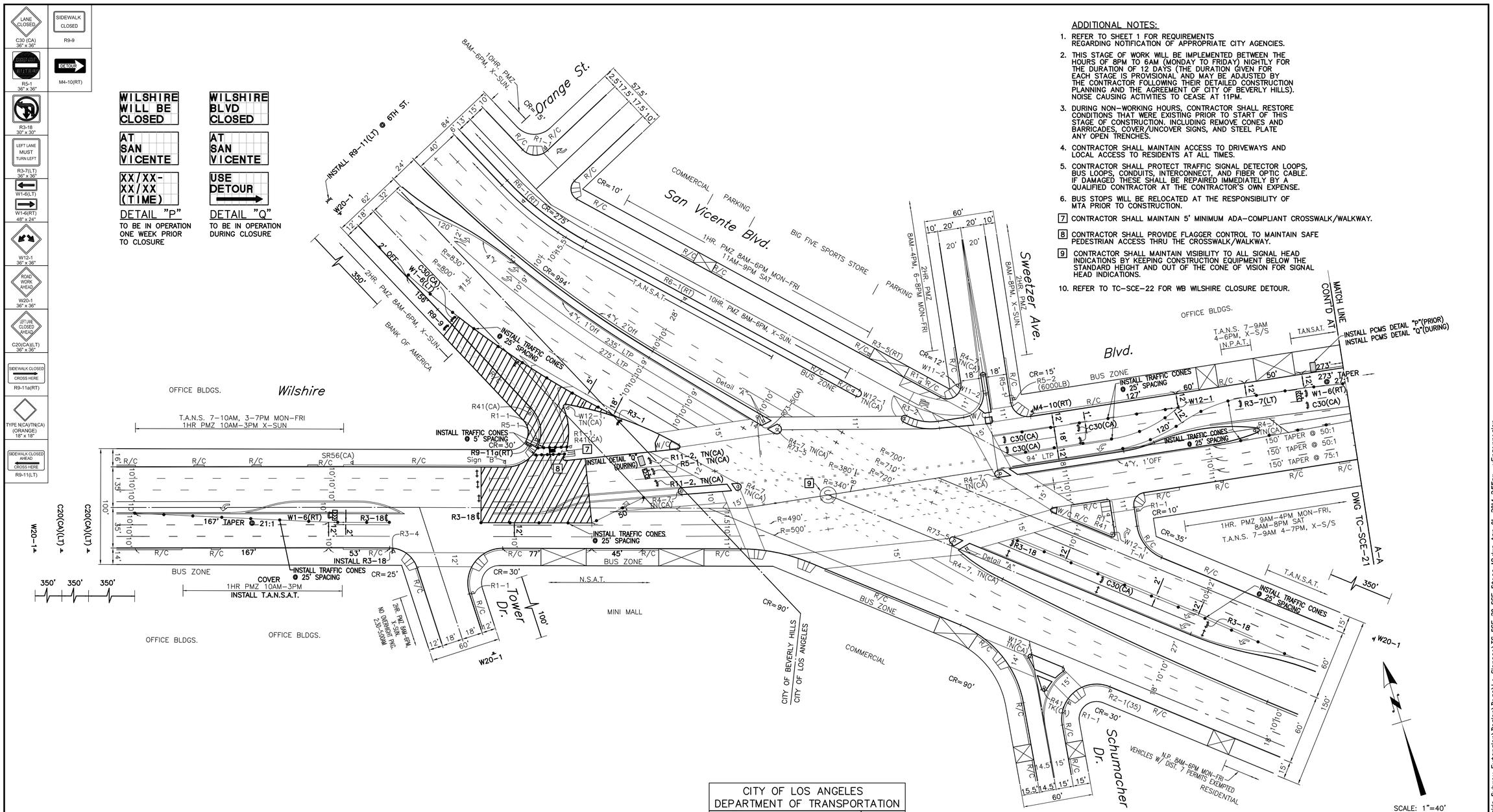

CITY OF LOS ANGELES
DEPARTMENT OF TRANSPORTATION

ACCEPTED — DATE

PRINCIPAL TRANSPORTATION ENGINEER

WTCP – LA CIENEGA STATION – TC-SCE-20

DRAWN BY:

V&A INC.
530 S. HEWITT ST. SUITE 121
LOS ANGELES, CA 90013
213.972.9700

PARSONS BRINCKERHOFF
777 SOUTH FIGUEROA ST. 11TH FLOOR
LOS ANGELES, CA 90017

DIGALERT
CALL TOLL FREE
1-800-227-2600
2 Working Days Before You Dig

REGISTERED PROFESSIONAL ENGINEER — PEDRO DANILO R. PERY — No. C35121 — Exp. 06/30/14 — CIVIL — STATE OF CALIFORNIA

STAMP

REVISIONS

D

CITY OF BEVERLY HILLS
ENGINEERING DEPARTMENT

DESIGNED BY	DRAWN BY	CHECKED BY	APPROVED BY
VY	VE	MG II	

SUBMITTED BY — RCE No.

REVIEWED BY — ENGINEER — DATE

ASSISTANT CITY ENGINEER — DATE

Traffic Control:

WESTSIDE SUBWAY EXTENSION PROJECT
ADVANCED UTILITY RELOCATION
LA CIENEGA STATION
SCE STAGE 18

P.O No.

CIP No.

PROJECT No.

SHEET NO. 20 OF 27

CADD PROJECT FILE NAME: P:\Westside Subway Extension\Design\Base\La Cienega\TC-SCE-20 SCE Stage 18.dwg Apr 01, 2014 2:55pm_vEncarnacion

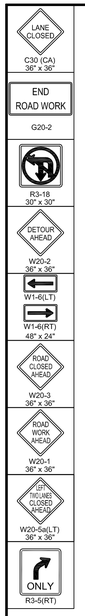

ADDITIONAL NOTES:

1. REFER TO SHEET 1 FOR REQUIREMENTS REGARDING NOTIFICATION OF APPROPRIATE CITY AGENCIES.
2. THIS STAGE OF WORK WILL BE IMPLEMENTED BETWEEN THE HOURS OF 8PM TO 6AM (MONDAY TO FRIDAY) NIGHTLY FOR THE DURATION OF XX DAYS (THE DURATION GIVEN FOR EACH STAGE IS PROVISIONAL AND MAY BE ADJUSTED BY THE CONTRACTOR FOLLOWING THEIR DETAILED CONSTRUCTION PLANNING AND THE AGREEMENT OF CITY OF BEVERLY HILLS). NOISE CAUSING ACTIVITIES TO CEASE AT 11PM.
3. DURING NON-WORKING HOURS, CONTRACTOR SHALL RESTORE CONDITIONS THAT WERE EXISTING PRIOR TO START OF THIS STAGE OF CONSTRUCTION. INCLUDING REMOVE CONES AND BARRICADES, COVER/UNCOVER SIGNS, AND STEEL PLATE ANY OPEN TRENCHES.
4. CONTRACTOR SHALL MAINTAIN ACCESS TO DRIVEWAYS AND LOCAL ACCESS TO RESIDENTS AT ALL TIMES.
5. CONTRACTOR SHALL PROTECT TRAFFIC SIGNAL DETECTOR LOOPS, BUS LOOPS, CONDUITS, INTERCONNECT, AND FIBER OPTIC CABLE. IF DAMAGED THESE SHALL BE REPAIRED IMMEDIATELY BY A QUALIFIED CONTRACTOR AT THE CONTRACTOR'S OWN EXPENSE.
6. BUS STOPS WILL BE RELOCATED AT THE RESPONSIBILITY OF MTA PRIOR TO CONSTRUCTION.
7. REFER TO TC-SCE-22 FOR WB WILSHIRE CLOSURE DETOUR.

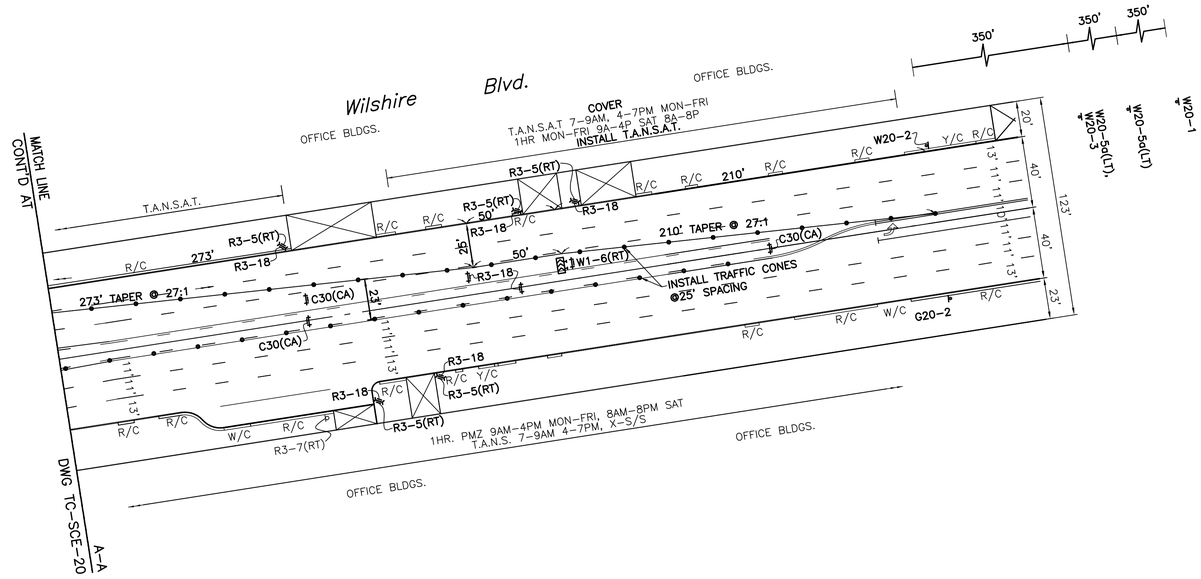

SCALE: 1"=40'

WTCP – LA CIENEGA STATION – TC-SCE-21

CITY OF LOS ANGELES
DEPARTMENT OF TRANSPORTATION

ACCEPTED | DATE

PRINCIPAL TRANSPORTATION ENGINEER

DRAWN BY:

V&A INC.
530 S. HEWITT ST. SUITE 121
LOS ANGELES, CA 90013
213.972.9700

PARSONS BRINCKERHOFF
777 SOUTH FIGUEROA ST. 11TH FLOOR
LOS ANGELES, CA 90017

DIGALERT
CALL TOLL FREE
1-800-227-2600
2 Working Days Before You Dig

REGISTERED PROFESSIONAL ENGINEER
PEDRO DANILO R. PELEN
No. C55121
Exp. 06/30/14
CIVIL
STATE OF CALIFORNIA

STAMP

REVISIONS

D

CITY OF BEVERLY HILLS
ENGINEERING DEPARTMENT

DESIGNED BY	DRAWN BY	CHECKED BY	APPROVED BY
VY	VE	MG II	

SUBMITTED BY | RCE No.

REVIEWED BY | ENGINEER | DATE

ASSISTANT CITY ENGINEER | DATE

Traffic Control:

WESTSIDE SUBWAY EXTENSION PROJECT
ADVANCED UTILITY RELOCATION
LA CIENEGA STATION
SCE STAGE 18

P.O No.

CIP No.

PROJECT No.

SHEET NO 21 OF 27

CADD PROJECT FILE NAME: P:\Westside Subway Extension\Design\Base\La Cienega\TC-SCE-21 SCE Stage 18.dwg Apr 01, 2014 2:56pm__vEncarnacion

ADDITIONAL NOTES:

1. THIS PLAN FOR CLOSURE OF EB & WB WILSHIRE BLVD. DIRECTIONAL CLOSURES AT SAN VICENTE BLVD.

DETOUR M4-9(RT)	DETOUR M4-9(LT)
END DETOUR M4-8a	DETOUR SC3(CA)
DETOUR AHEAD W20-2 36" x 36"	ROAD WORK AHEAD W20-1 36" x 36"
DETOUR M4-10(LT)	DETOUR M4-10(RT)
ROAD CLOSED AHEAD W20-3 36" x 36"	

WILSHIRE WILL BE CLOSED
AT SAN VICENTE
XX/XX-XX/XX (TIME)

DETAIL "P"
TO BE IN OPERATION ONE WEEK PRIOR TO CLOSURE

WILSHIRE BLVD CLOSED
AT SAN VICENTE
USE ALT ROUTE

DETAIL "U"
TO BE IN OPERATION DURING CLOSURE

WILSHIRE BLVD CLOSED
AT SAN VICENTE
USE DETOUR

DETAIL "R"
TO BE IN OPERATION DURING CLOSURE

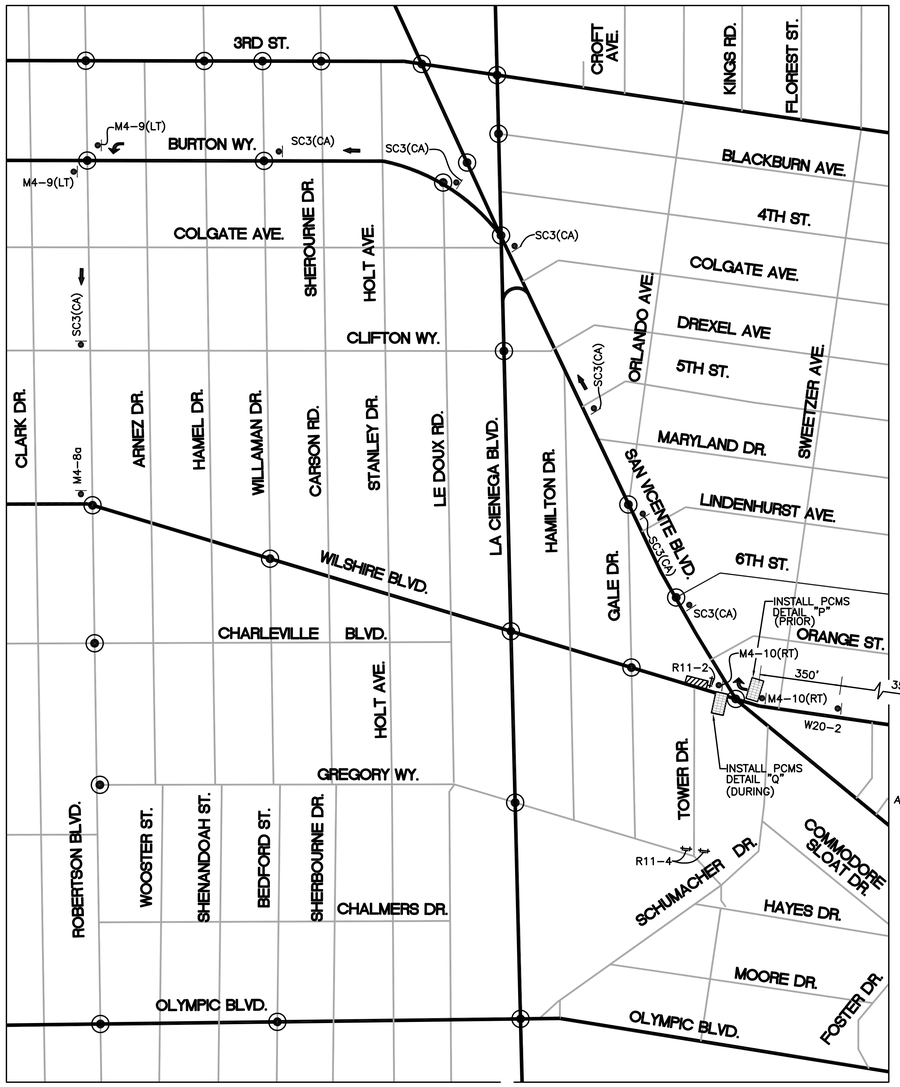

LA CIENEGA WB DIRECTIONAL CLOSURE DETOUR

NOT TO SCALE
DURATION OF CLOSURE WILL BE DURING XXXX

WILSHIRE BLVD CLOSED
AT SAN VICENTE
USE DETOUR

DETAIL "Q"
TO BE IN OPERATION DURING CLOSURE

LEGEND FOR DETOUR PLAN:

- TEMPORARY SIGN TO BE INSTALLED AS PART OF DETOUR
- PORTABLE CHANGEABLE MESSAGE SIGN
- DIRECTION OF TRAVEL
- SIGNALIZED INTERSECTION
- POINT OF CLOSURE

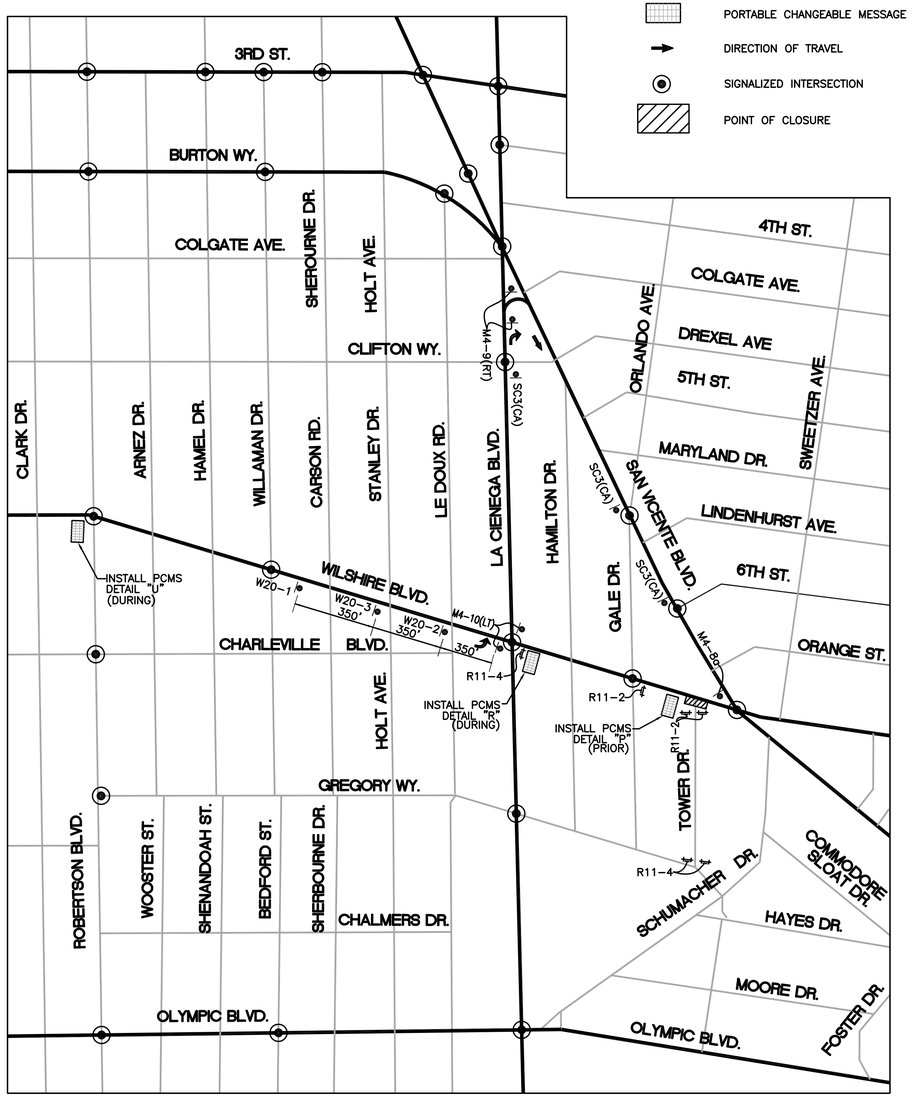

LA CIENEGA EB DIRECTIONAL CLOSURE DETOUR

NOT TO SCALE
DURATION OF CLOSURE WILL BE DURING XXXXX

WTCP – LA CIENEGA STATION – TC-SCE-22

DRAWN BY:
V&A INC.
530 S. HEWITT ST. SUITE 121
LOS ANGELES, CA 90013
213.972.9700

PARSONS BRINCKERHOFF
777 SOUTH FIGUEROA ST. 11TH FLOOR
LOS ANGELES, CA 90017

DIGALERT
CALL TOLL FREE
1-800-227-2600
2 Working Days Before You Dig

REGISTERED PROFESSIONAL ENGINEER — PEDRO DANILO R. PELEN — No. C65121 — Exp. 06/30/14 — CIVIL — STATE OF CALIFORNIA
STAMP

REVISIONS

D CITY OF BEVERLY HILLS
ENGINEERING DEPARTMENT

DESIGNED BY	DRAWN BY	CHECKED BY	APPROVED BY
VH	VE	MG II	

SUBMITTED BY RCE No.
REVIEWED BY
ASSISTANT CITY ENGINEER DATE
ENGINEER DATE

Traffic Control:

WESTSIDE SUBWAY EXTENSION PROJECT
ADVANCED UTILITY RELOCATION
LA CIENEGA STATION
SCE DIRECTIONAL CLOSURE DETOURS

P.O No.
CIP No.
PROJECT No.
SHEET NO 22 OF 27

CADD PROJECT FILE NAME: P:\Westside Subway Extension\Design\Base\La Cienega\TC-SCE-22 SCE Stage 17 & 18 EB WB Directional Detours.dwg Apr 01, 2014 4:16pm_vEncarnacion

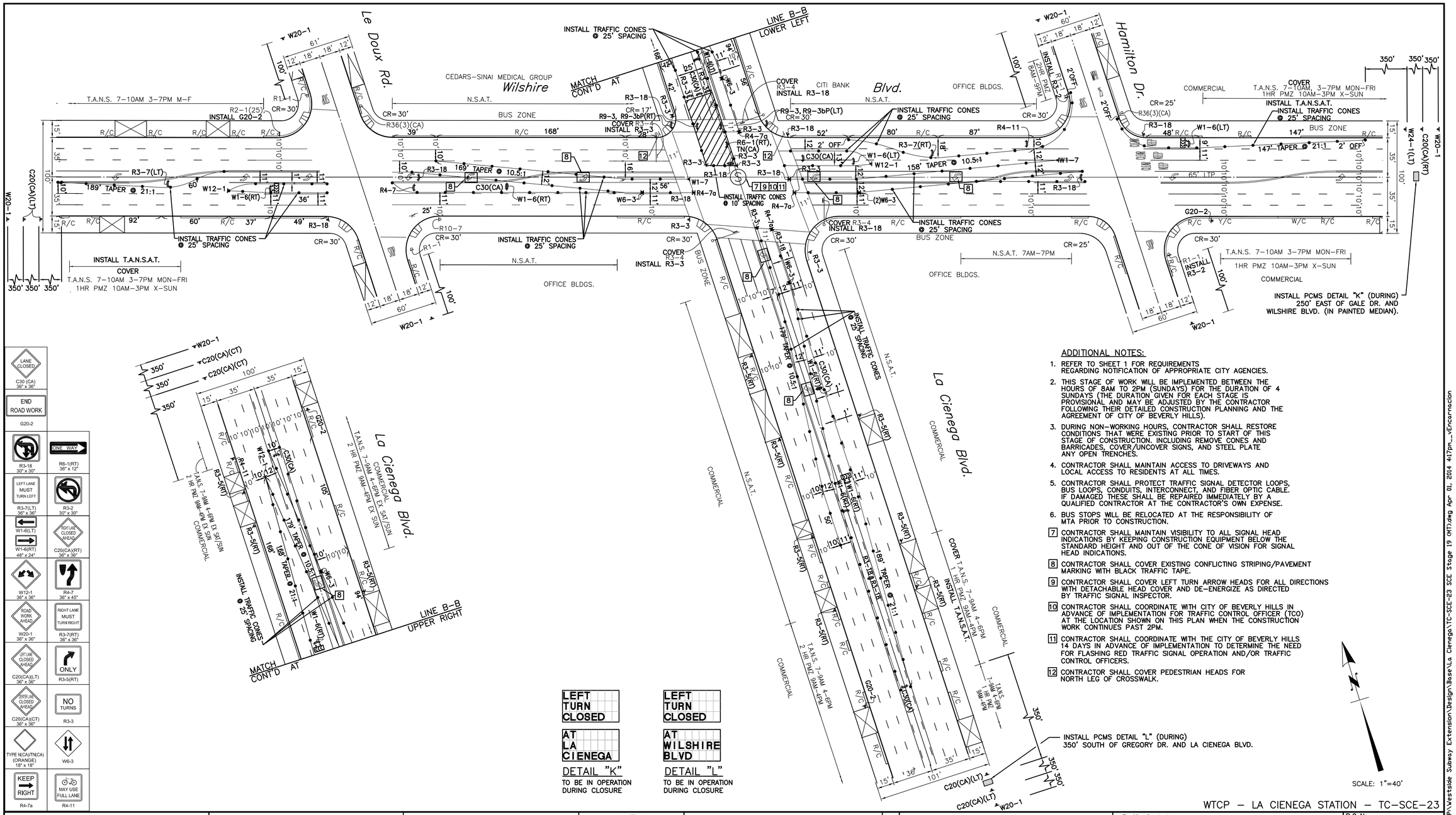

ADDITIONAL NOTES:

1. REFER TO SHEET 1 FOR REQUIREMENTS REGARDING NOTIFICATION OF APPROPRIATE CITY AGENCIES.
2. THIS STAGE OF WORK WILL BE IMPLEMENTED BETWEEN THE HOURS OF 8AM TO 2PM (SUNDAYS) FOR THE DURATION OF 4 SUNDAYS (THE DURATION GIVEN FOR EACH STAGE IS PROVISIONAL AND MAY BE ADJUSTED BY THE CONTRACTOR FOLLOWING THEIR DETAILED CONSTRUCTION PLANNING AND THE AGREEMENT OF CITY OF BEVERLY HILLS).
3. DURING NON-WORKING HOURS, CONTRACTOR SHALL RESTORE CONDITIONS THAT WERE EXISTING PRIOR TO START OF THIS STAGE OF CONSTRUCTION. INCLUDING REMOVE CONES AND BARRICADES, COVER/UNCOVER SIGNS, AND STEEL PLATE ANY OPEN TRENCHES.
4. CONTRACTOR SHALL MAINTAIN ACCESS TO DRIVEWAYS AND LOCAL ACCESS TO RESIDENTS AT ALL TIMES.
5. CONTRACTOR SHALL PROTECT TRAFFIC SIGNAL DETECTOR LOOPS, BUS LOOPS, CONDUITS, INTERCONNECT, AND FIBER OPTIC CABLE. IF DAMAGED THESE SHALL BE REPAIRED IMMEDIATELY BY A QUALIFIED CONTRACTOR AT THE CONTRACTOR'S OWN EXPENSE.
6. BUS STOPS WILL BE RELOCATED AT THE RESPONSIBILITY OF MTA PRIOR TO CONSTRUCTION.
7. CONTRACTOR SHALL MAINTAIN VISIBILITY TO ALL SIGNAL HEAD INDICATIONS BY KEEPING CONSTRUCTION EQUIPMENT BELOW THE STANDARD HEIGHT AND OUT OF THE CONE OF VISION FOR SIGNAL HEAD INDICATIONS.
8. CONTRACTOR SHALL COVER EXISTING CONFLICTING STRIPING/PAVEMENT MARKING WITH BLACK TRAFFIC TAPE.
9. CONTRACTOR SHALL COVER LEFT TURN ARROW HEADS FOR ALL DIRECTIONS WITH DETACHABLE HEAD COVER AND DE-ENERGIZE AS DIRECTED BY TRAFFIC SIGNAL INSPECTOR.
10. CONTRACTOR SHALL COORDINATE WITH CITY OF BEVERLY HILLS IN ADVANCE OF IMPLEMENTATION FOR TRAFFIC CONTROL OFFICER (TCO) AT THE LOCATION SHOWN ON THIS PLAN WHEN THE CONSTRUCTION WORK CONTINUES PAST 2PM.
11. CONTRACTOR SHALL COORDINATE WITH THE CITY OF BEVERLY HILLS 14 DAYS IN ADVANCE OF IMPLEMENTATION TO DETERMINE THE NEED FOR FLASHING RED TRAFFIC SIGNAL OPERATION AND/OR TRAFFIC CONTROL OFFICERS.
12. CONTRACTOR SHALL COVER PEDESTRIAN HEADS FOR NORTH LEG OF CROSSWALK.

SCALE: 1"=40'

WTCP – LA CIENEGA STATION – TC-SCE-23

DRAWN BY:
V&A INC.
530 S. HEWITT ST. SUITE 121
LOS ANGELES, CA 90013
213.972.9700

PARSONS BRINCKERHOFF
777 SOUTH FIGUEROA ST. 11TH FLOOR
LOS ANGELES, CA 90017

DIGALERT
CALL TOLL FREE
1-800-227-2600
2 Working Days Before You Dig

REGISTERED PROFESSIONAL ENGINEER
PEDRO DANILO R. PERRY
No. C56181
Exp. 06/30/14
CIVIL
STATE OF CALIFORNIA
STAMP

REVISIONS

D
CITY OF BEVERLY HILLS
ENGINEERING DEPARTMENT

DESIGNED BY	DRAWN BY	CHECKED BY	APPROVED BY
VH	VE	MG II	

SUBMITTED BY RCE No.
REVIEWED BY ENGINEER DATE
ASSISTANT CITY ENGINEER DATE

Traffic Control:

WESTSIDE SUBWAY EXTENSION PROJECT
ADVANCED UTILITY RELOCATION
LA CIENEGA STATION
SCE STAGE 19

P.O No.
CIP No.
PROJECT No.
SHEET NO 23 OF 27

CADD PROJECT FILE NAME: P:\Westside Subway Extension\Design\Base\La Cienega\TC-SCE-23 SCE Stage 19 (MT).dwg Apr 01, 2014 4:17pm_vEncarnacion

LANE CLOSED C30 (CA) 36" x 36"	ROAD WORK AHEAD W20-1 36" x 36"
END ROAD WORK G20-2	RIGHT LANE CLOSED AHEAD C20(CA)(RT) 36" x 36"
R3-18 30" x 30"	TYPE N(CA)TN(CA) (ORANGE) 18" x 18"
ONLY R3-5(RT)	W1-7 48" x 24"

LEFT TURN CLOSED AT LA CIENEGA

DETAIL "K"
TO BE IN OPERATION DURING CLOSURE

LEFT TURN CLOSED AT WILSHIRE BLVD

DETAIL "L"
TO BE IN OPERATION DURING CLOSURE

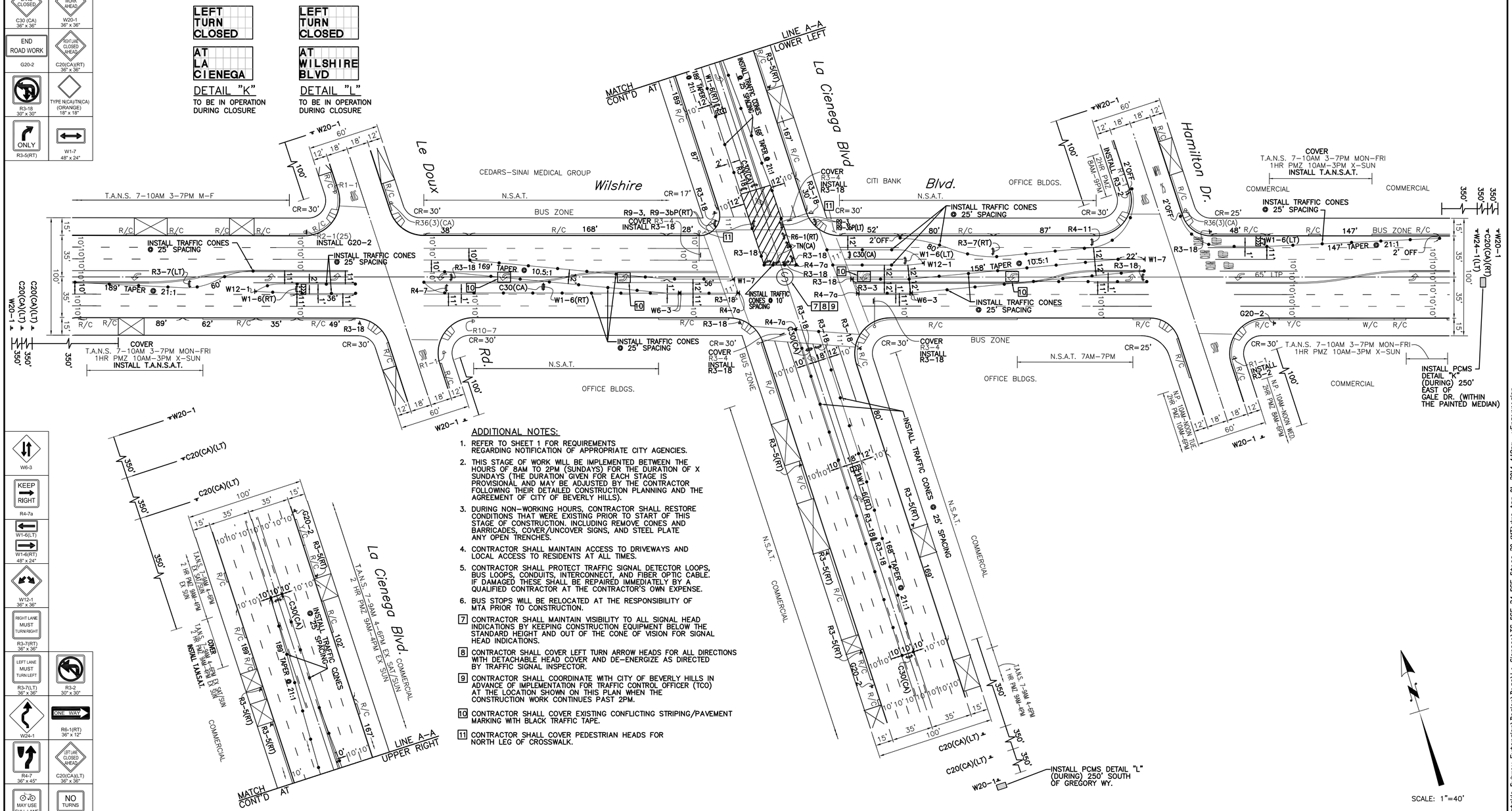

ADDITIONAL NOTES:

1. REFER TO SHEET 1 FOR REQUIREMENTS REGARDING NOTIFICATION OF APPROPRIATE CITY AGENCIES.
2. THIS STAGE OF WORK WILL BE IMPLEMENTED BETWEEN THE HOURS OF 8AM TO 2PM (SUNDAYS) FOR THE DURATION OF X SUNDAYS (THE DURATION GIVEN FOR EACH STAGE IS PROVISIONAL AND MAY BE ADJUSTED BY THE CONTRACTOR FOLLOWING THEIR DETAILED CONSTRUCTION PLANNING AND THE AGREEMENT OF CITY OF BEVERLY HILLS).
3. DURING NON-WORKING HOURS, CONTRACTOR SHALL RESTORE CONDITIONS THAT WERE EXISTING PRIOR TO START OF THIS STAGE OF CONSTRUCTION. INCLUDING REMOVE CONES AND BARRICADES, COVER/UNCOVER SIGNS, AND STEEL PLATE ANY OPEN TRENCHES.
4. CONTRACTOR SHALL MAINTAIN ACCESS TO DRIVEWAYS AND LOCAL ACCESS TO RESIDENTS AT ALL TIMES.
5. CONTRACTOR SHALL PROTECT TRAFFIC SIGNAL DETECTOR LOOPS, BUS LOOPS, CONDUITS, INTERCONNECT, AND FIBER OPTIC CABLE. IF DAMAGED THESE SHALL BE REPAIRED IMMEDIATELY BY A QUALIFIED CONTRACTOR AT THE CONTRACTOR'S OWN EXPENSE.
6. BUS STOPS WILL BE RELOCATED AT THE RESPONSIBILITY OF MTA PRIOR TO CONSTRUCTION.
7. CONTRACTOR SHALL MAINTAIN VISIBILITY TO ALL SIGNAL HEAD INDICATIONS BY KEEPING CONSTRUCTION EQUIPMENT BELOW THE STANDARD HEIGHT AND OUT OF THE CONE OF VISION FOR SIGNAL HEAD INDICATIONS.
8. CONTRACTOR SHALL COVER LEFT TURN ARROW HEADS FOR ALL DIRECTIONS WITH DETACHABLE HEAD COVER AND DE-ENERGIZE AS DIRECTED BY TRAFFIC SIGNAL INSPECTOR.
9. CONTRACTOR SHALL COORDINATE WITH CITY OF BEVERLY HILLS IN ADVANCE OF IMPLEMENTATION FOR TRAFFIC CONTROL OFFICER (TCO) AT THE LOCATION SHOWN ON THIS PLAN WHEN THE CONSTRUCTION WORK CONTINUES PAST 2PM.
10. CONTRACTOR SHALL COVER EXISTING CONFLICTING STRIPING/PAVEMENT MARKING WITH BLACK TRAFFIC TAPE.
11. CONTRACTOR SHALL COVER PEDESTRIAN HEADS FOR NORTH LEG OF CROSSWALK.

W6-3	KEEP RIGHT R4-7a
W1-6(LT) W1-6(RT) 48" x 24"	W12-1 36" x 36"
RIGHT LANE MUST TURN RIGHT R3-7(RT) 36" x 36"	LEFT LANE MUST TURN LEFT R3-7(LT) 36" x 36"
R3-2 30" x 30"	W24-1
ONE WAY R6-1(RT) 36" x 12"	R4-7 36" x 45"
LEFT LANE CLOSED AHEAD C20(CA)(LT) 36" x 36"	MAY USE FULL LANE R4-11
NO TURNS R3-3	

WTCP – LA CIENEGA STATION – TC-SCE-24

DRAWN BY:

V&A INC.
530 S. HEWITT ST. SUITE 121
LOS ANGELES, CA 90013
213.972.9700

PARSONS BRINCKERHOFF
777 SOUTH FIGUEROA ST. 11TH FLOOR
LOS ANGELES, CA 90017

DIGALERT
CALL TOLL FREE
1-800-227-2600
2 Working Days Before You Dig

REGISTERED PROFESSIONAL ENGINEER
PEDRO DANILO R. PEJEN
No. C56181
Exp. 06/30/14
CIVIL
STATE OF CALIFORNIA
STAMP

REVISIONS

D **CITY OF BEVERLY HILLS**
ENGINEERING DEPARTMENT

DESIGNED BY	DRAWN BY	CHECKED BY	APPROVED BY
VH	VH	MG II	

SUBMITTED BY RCE No.
REVIEWED BY
ASSISTANT CITY ENGINEER DATE
ENGINEER DATE

Traffic Control:

WESTSIDE SUBWAY EXTENSION PROJECT
ADVANCED UTILITY RELOCATION
LA CIENEGA STATION
SCE STAGE 20

P.O No.
CIP No.
PROJECT No.
SHEET NO 24 OF 27

CADD PROJECT FILE NAME: P:\Westside Subway Extension\Design\Base\La Cienega\TC-SCE-24 SCE Stage 20 (MT).dwg Apr 01, 2014 4:18pm_vEncarnacion

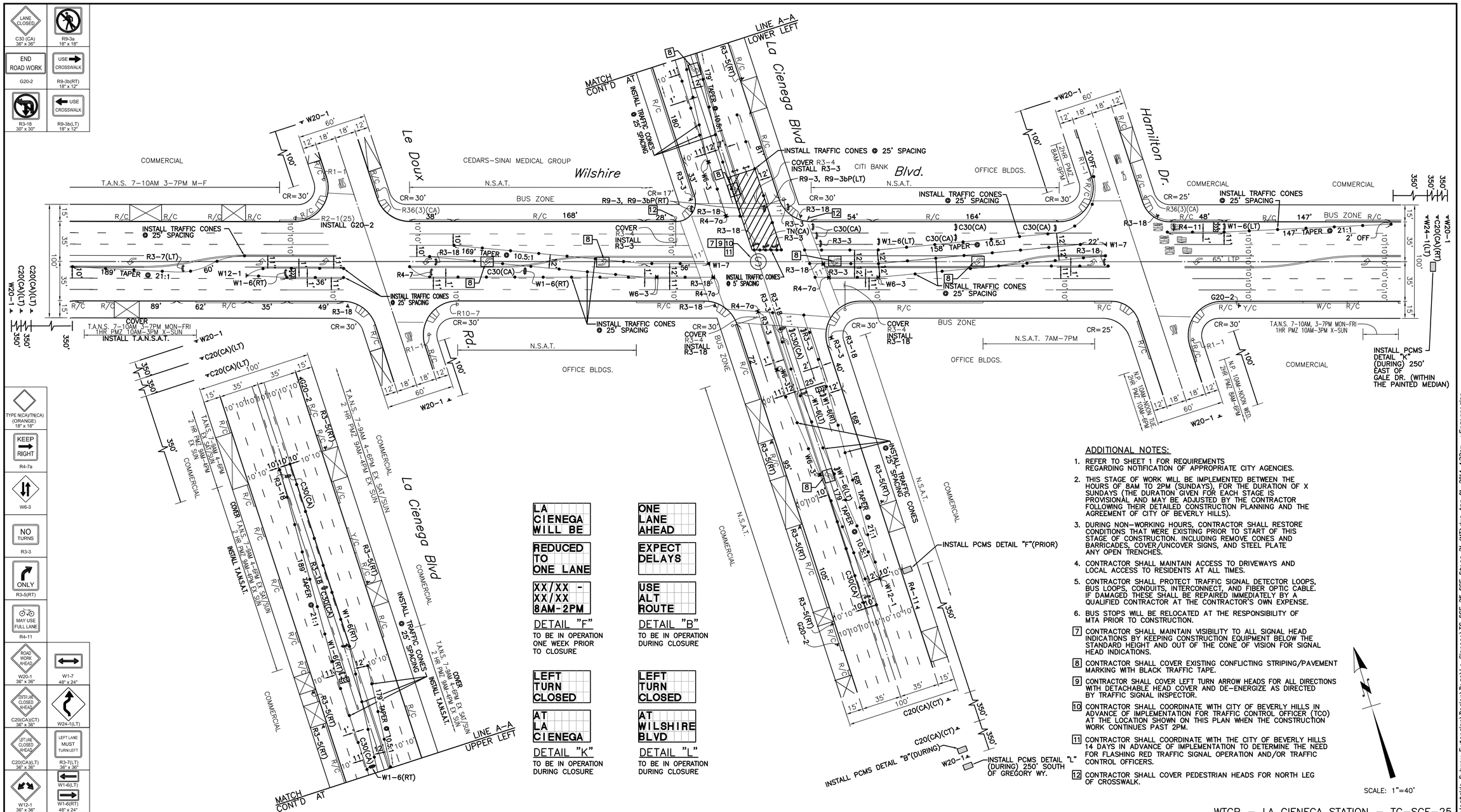

WTCP – LA CIENEGA STATION – TC-SCE-25

DRAWN BY:

V&A INC.
530 S. HEWITT ST. SUITE 121
LOS ANGELES, CA 90013
213.972.9700

PARSONS BRINCKERHOFF
777 SOUTH FIGUEROA ST. 11TH FLOOR
LOS ANGELES, CA 90017

DIGALERT
CALL TOLL FREE
1-800-227-2600
2 Working Days Before You Dig

STAMP
REGISTERED PROFESSIONAL ENGINEER PEDRO DANILO R. PERN No. C56181 Exp. 06/30/15 CIVIL STATE OF CALIFORNIA

REVISIONS

D

CITY OF BEVERLY HILLS
ENGINEERING DEPARTMENT

DESIGNED BY	DRAWN BY	CHECKED BY	APPROVED BY
VY	VE	MG II	

SUBMITTED BY RCE No.
REVIEWED BY ENGINEER DATE
ASSISTANT CITY ENGINEER DATE

Traffic Control:

WESTSIDE SUBWAY EXTENSION PROJECT
ADVANCED UTILITY RELOCATION
LA CIENEGA STATION
SCE STAGE 21

P.O No.
CIP No.
PROJECT No.
SHEET NO 25 OF 27

CADD PROJECT FILE NAME: P:\Westside Subway Extension\Design\Base\La Cienega\TC-SCE-25 SCE Stage 21 (4).dwg Apr 01, 2014 4:22pm_vEncarnacion

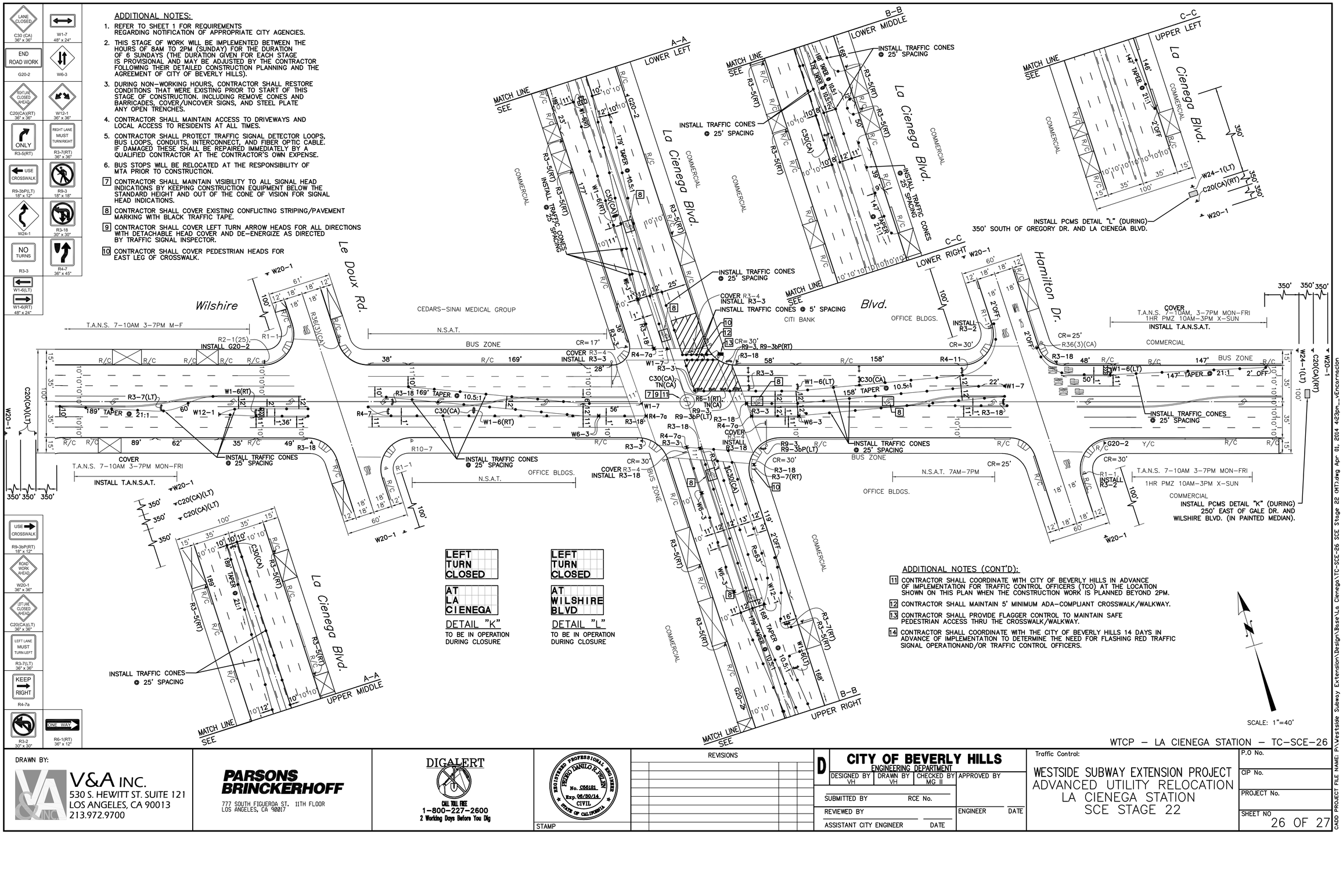

DRAWN BY:

V&A INC.
530 S. HEWITT ST. SUITE 121
LOS ANGELES, CA 90013
213.972.9700

PARSONS BRINCKERHOFF
777 SOUTH FIGUEROA ST. 11TH FLOOR
LOS ANGELES, CA 90017

DIGALERT
CALL TOLL FREE
1-800-227-2600
2 Working Days Before You Dig

REGISTERED PROFESSIONAL ENGINEER PEDRO DANILO R. PERY No. C56181 Exp. 06/30/14 CIVIL STATE OF CALIFORNIA
STAMP

REVISIONS

D CITY OF BEVERLY HILLS
ENGINEERING DEPARTMENT

DESIGNED BY	DRAWN BY	CHECKED BY	APPROVED BY
VH	VH	MG II	

SUBMITTED BY RCE No.
REVIEWED BY
ASSISTANT CITY ENGINEER DATE
ENGINEER DATE

Traffic Control:

WESTSIDE SUBWAY EXTENSION PROJECT
ADVANCED UTILITY RELOCATION
LA CIENEGA STATION
SCE STAGE 22

P.O No.
CIP No.
PROJECT No.
SHEET NO 26 OF 27

CADD PROJECT FILE NAME: P:\Westside Subway Extension\Design\Base\La Cienega\TC-SCE-26 SCE Stage 22 (MT).dwg Apr 01, 2014 4:23pm_vEncarnacion

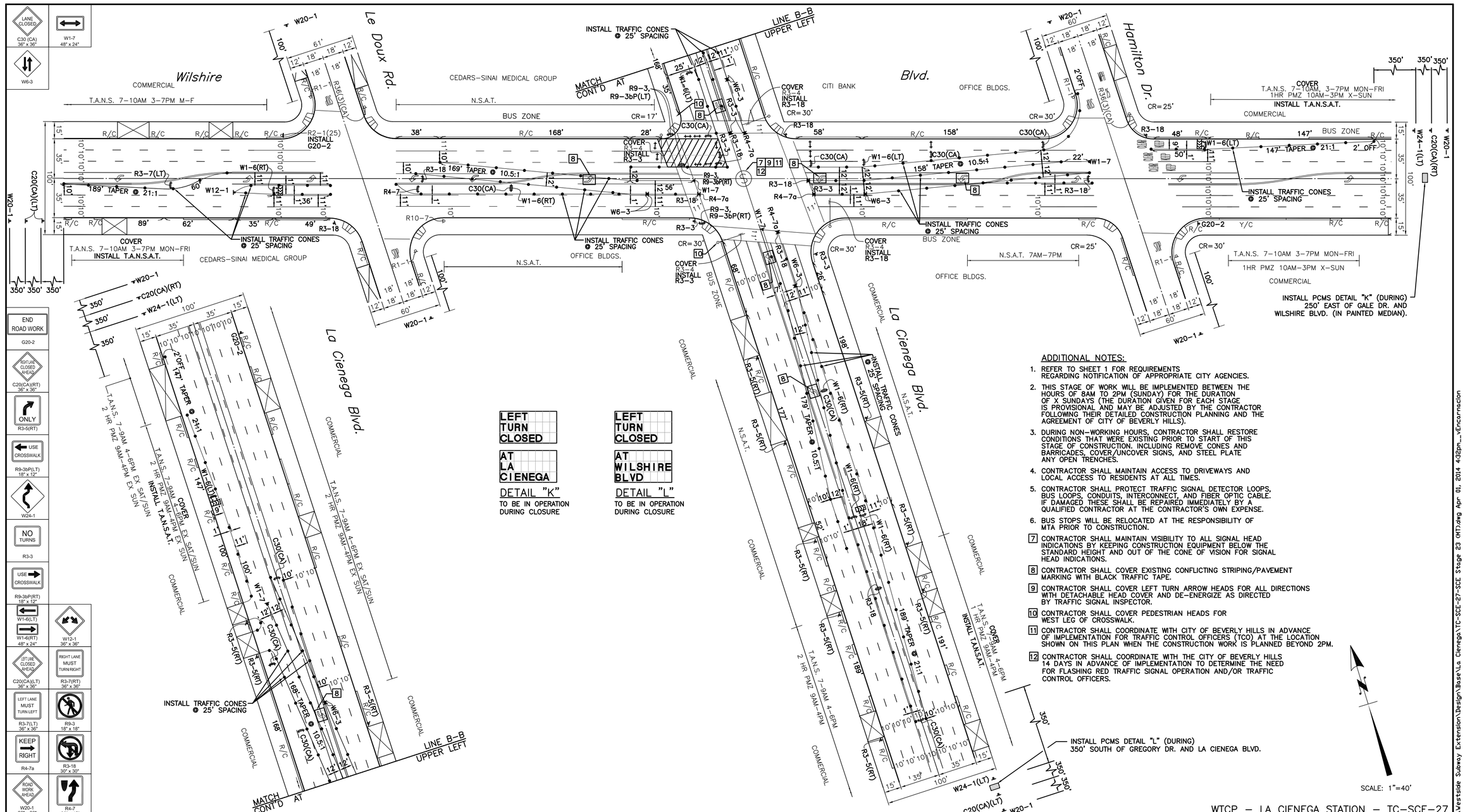

ADDITIONAL NOTES:

1. REFER TO SHEET 1 FOR REQUIREMENTS REGARDING NOTIFICATION OF APPROPRIATE CITY AGENCIES.
2. THIS STAGE OF WORK WILL BE IMPLEMENTED BETWEEN THE HOURS OF 8AM TO 2PM (SUNDAY) FOR THE DURATION OF X SUNDAYS (THE DURATION GIVEN FOR EACH STAGE IS PROVISIONAL AND MAY BE ADJUSTED BY THE CONTRACTOR FOLLOWING THEIR DETAILED CONSTRUCTION PLANNING AND THE AGREEMENT OF CITY OF BEVERLY HILLS).
3. DURING NON-WORKING HOURS, CONTRACTOR SHALL RESTORE CONDITIONS THAT WERE EXISTING PRIOR TO START OF THIS STAGE OF CONSTRUCTION. INCLUDING REMOVE CONES AND BARRICADES, COVER/UNCOVER SIGNS, AND STEEL PLATE ANY OPEN TRENCHES.
4. CONTRACTOR SHALL MAINTAIN ACCESS TO DRIVEWAYS AND LOCAL ACCESS TO RESIDENTS AT ALL TIMES.
5. CONTRACTOR SHALL PROTECT TRAFFIC SIGNAL DETECTOR LOOPS, BUS LOOPS, CONDUITS, INTERCONNECT, AND FIBER OPTIC CABLE. IF DAMAGED THESE SHALL BE REPAIRED IMMEDIATELY BY A QUALIFIED CONTRACTOR AT THE CONTRACTOR'S OWN EXPENSE.
6. BUS STOPS WILL BE RELOCATED AT THE RESPONSIBILITY OF MTA PRIOR TO CONSTRUCTION.
7. CONTRACTOR SHALL MAINTAIN VISIBILITY TO ALL SIGNAL HEAD INDICATIONS BY KEEPING CONSTRUCTION EQUIPMENT BELOW THE STANDARD HEIGHT AND OUT OF THE CONE OF VISION FOR SIGNAL HEAD INDICATIONS.
8. CONTRACTOR SHALL COVER EXISTING CONFLICTING STRIPING/PAVEMENT MARKING WITH BLACK TRAFFIC TAPE.
9. CONTRACTOR SHALL COVER LEFT TURN ARROW HEADS FOR ALL DIRECTIONS WITH DETACHABLE HEAD COVER AND DE-ENERGIZE AS DIRECTED BY TRAFFIC SIGNAL INSPECTOR.
10. CONTRACTOR SHALL COVER PEDESTRIAN HEADS FOR WEST LEG OF CROSSWALK.
11. CONTRACTOR SHALL COORDINATE WITH CITY OF BEVERLY HILLS IN ADVANCE OF IMPLEMENTATION FOR TRAFFIC CONTROL OFFICERS (TCO) AT THE LOCATION SHOWN ON THIS PLAN WHEN THE CONSTRUCTION WORK IS PLANNED BEYOND 2PM.
12. CONTRACTOR SHALL COORDINATE WITH THE CITY OF BEVERLY HILLS 14 DAYS IN ADVANCE OF IMPLEMENTATION TO DETERMINE THE NEED FOR FLASHING RED TRAFFIC SIGNAL OPERATION AND/OR TRAFFIC CONTROL OFFICERS.

WTCP – LA CIENEGA STATION – TC-SCE-27

DRAWN BY:
V&A INC.
530 S. HEWITT ST. SUITE 121
LOS ANGELES, CA 90013
213.972.9700

PARSONS BRINCKERHOFF
777 SOUTH FIGUEROA ST. 11TH FLOOR
LOS ANGELES, CA 90017

DIGALERT
CALL TOLL FREE
1-800-227-2600
2 Working Days Before You Dig

REGISTERED PROFESSIONAL ENGINEER
PEDRO DANILO R. PERRY
No. C56181
Exp. 06/30/14
CIVIL
STATE OF CALIFORNIA
STAMP

REVISIONS

D
CITY OF BEVERLY HILLS
ENGINEERING DEPARTMENT

DESIGNED BY	DRAWN BY	CHECKED BY	APPROVED BY
VH	VE	MG II	

SUBMITTED BY RCE No.
REVIEWED BY
ASSISTANT CITY ENGINEER DATE
ENGINEER DATE

Traffic Control:
WESTSIDE SUBWAY EXTENSION PROJECT
ADVANCED UTILITY RELOCATION
LA CIENEGA STATION
SCE STAGE 23

P.O No.
CIP No.
PROJECT No.
SHEET NO 27 OF 27

CADD PROJECT FILE NAME: P:\Westside Subway Extension\Design\Base\La Cienega\TC-SCE-27-SCE Stage 23 (MT).dwg Apr 01, 2014

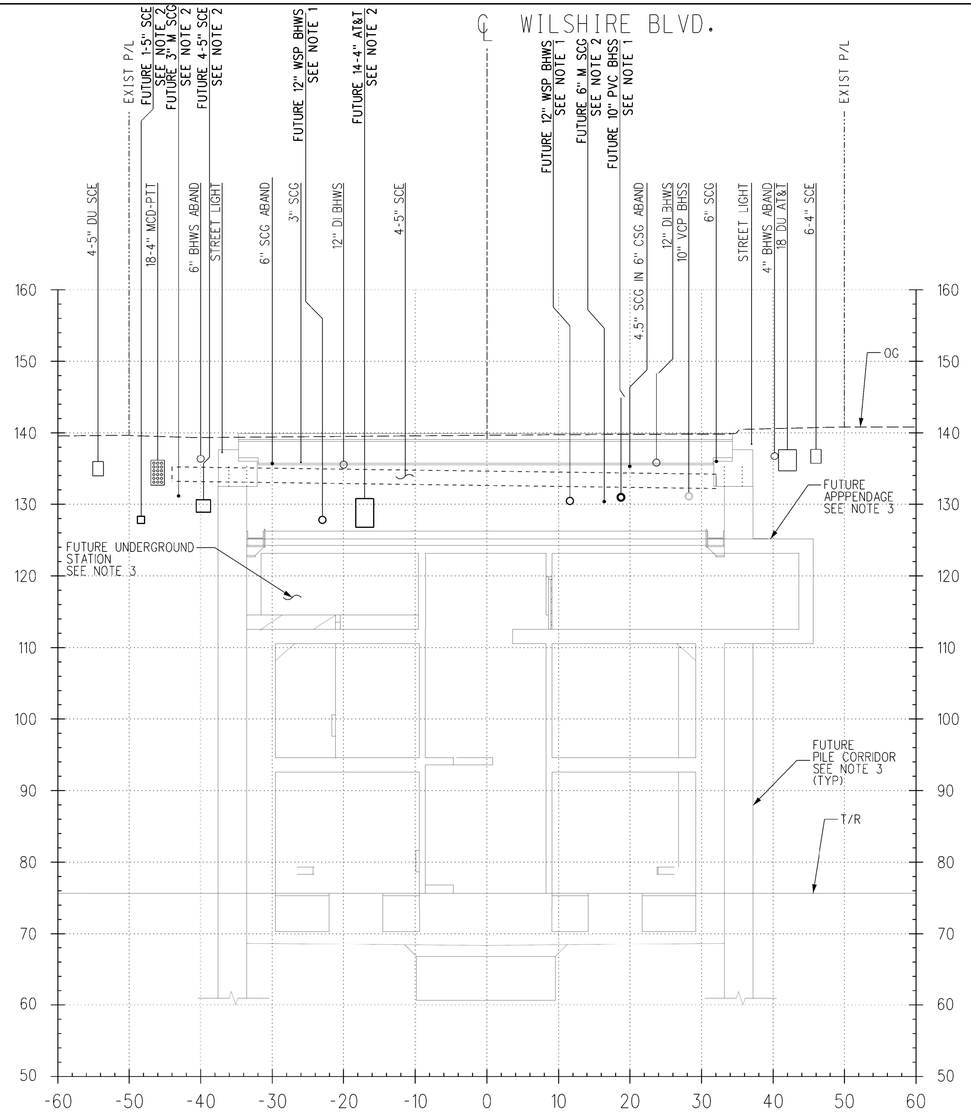

WILSHIRE/LA CIENEGA STATION
STA 565+20.82
1" = 10'
2
U-450

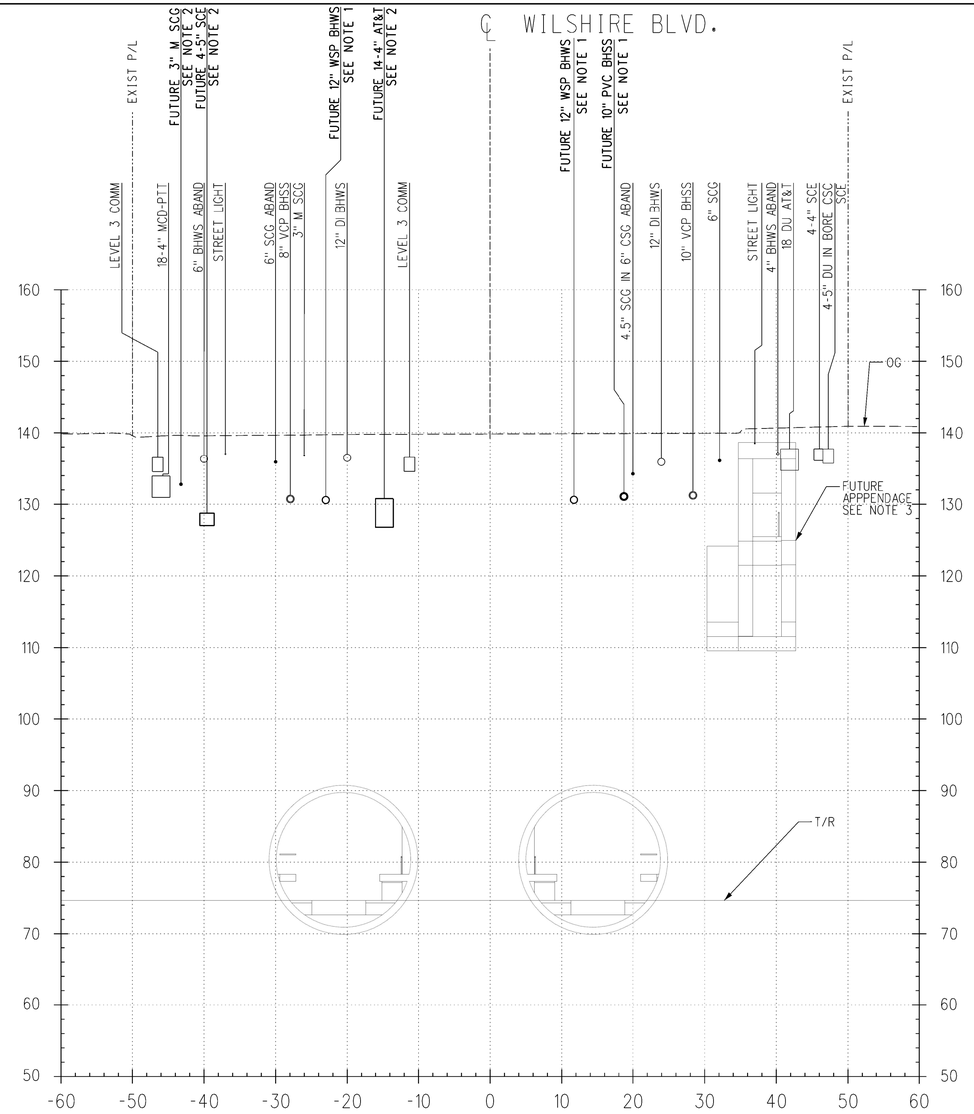

WILSHIRE/LA CIENEGA STATION
STA 564+99.50
1" = 10'
1
U-450

NOTES:

1. TO BE CONSTRUCTED PER C1056 ADVANCED UTILITY RELOCATIONS CONTRACT PACKAGE.
2. C1056 CONTRACTOR TO VERIFY STATUS OF UTILITY RELOCATIONS WITH THE OWNER.
3. FUTURE APPENDAGES, PILE CORRIDER, TEMPORARY DECK AND STATIONS SHOWN FOR REFERENCE ONLY AND N.I.C.

VERT 10' 0 10' 20'
HORIZ

FOR INFORMATION ONLY

REV	DATE	BY	APP	REG NO	EXPIRES	SEAL HOLDER	DESCRIPTION

DESIGNED BY J. VARIAS
DRAWN BY J. MONG
CHECKED BY G. MUNSON
IN CHARGE Z. MUDAR
DATE 05/22/2013

Metro
PARSONS BRINCKERHOFF

LOS ANGELES COUNTY
METROPOLITAN TRANSPORTATION AUTHORITY

WESTSIDE SUBWAY EXTENSION
ADVANCED PRELIMINARY ENGINEERING

WILSHIRE/LA CIENEGA STATION
UTILITY RELOCATION CROSS SECTIONS
STA 564+99.50 & STA 565+20.82

CONTRACT NO
DRAWING NO U-471
REV
SCALE VERT: 1" = 10' HORIZ: 1" = 10'
SHEET NO 163

L:\LAWSBIM\WACBM\CADD\12_Utilities\Sheets\Sections\C0XXXup471.plg
4/1/2014
2:48:04 PM

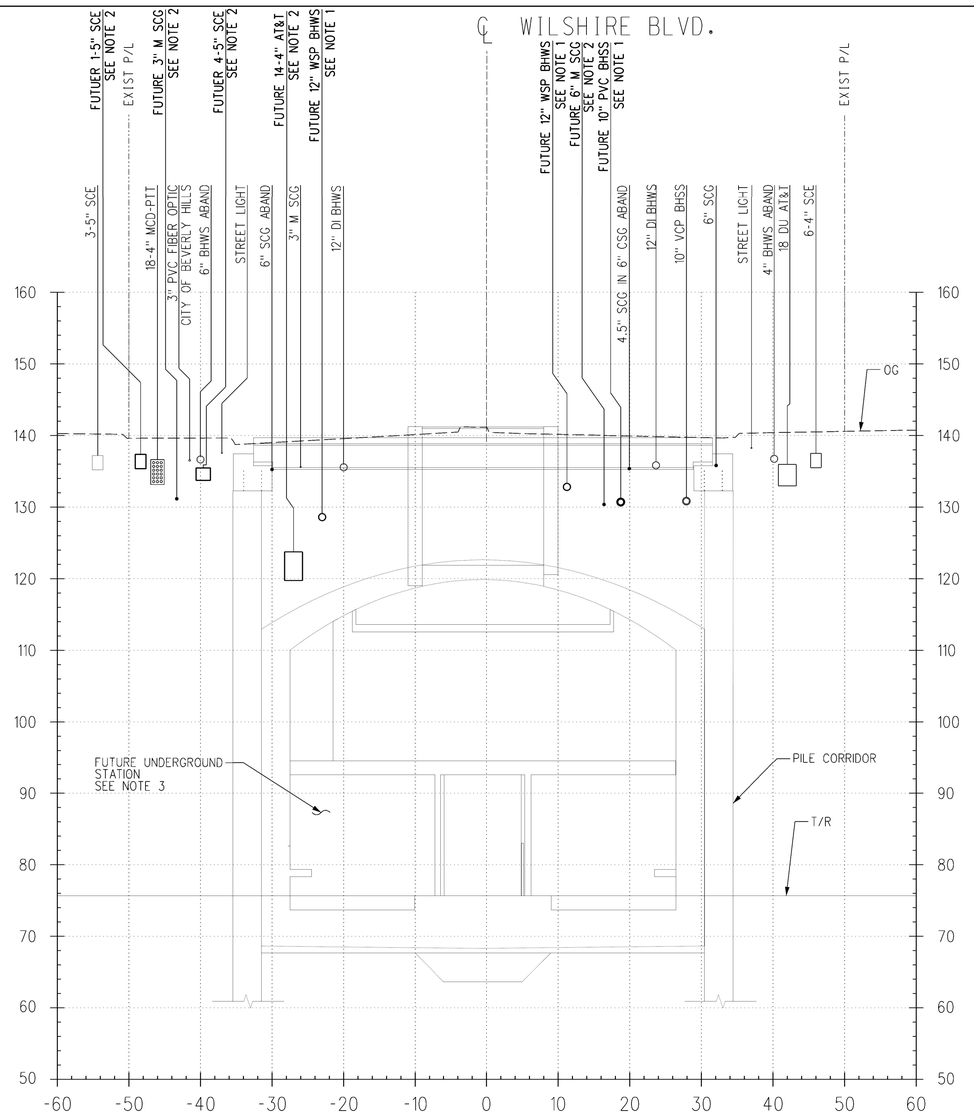

WILSHIRE/LA CIENEGA STATION
STA 565+69.37
1" = 10'
4
U-450

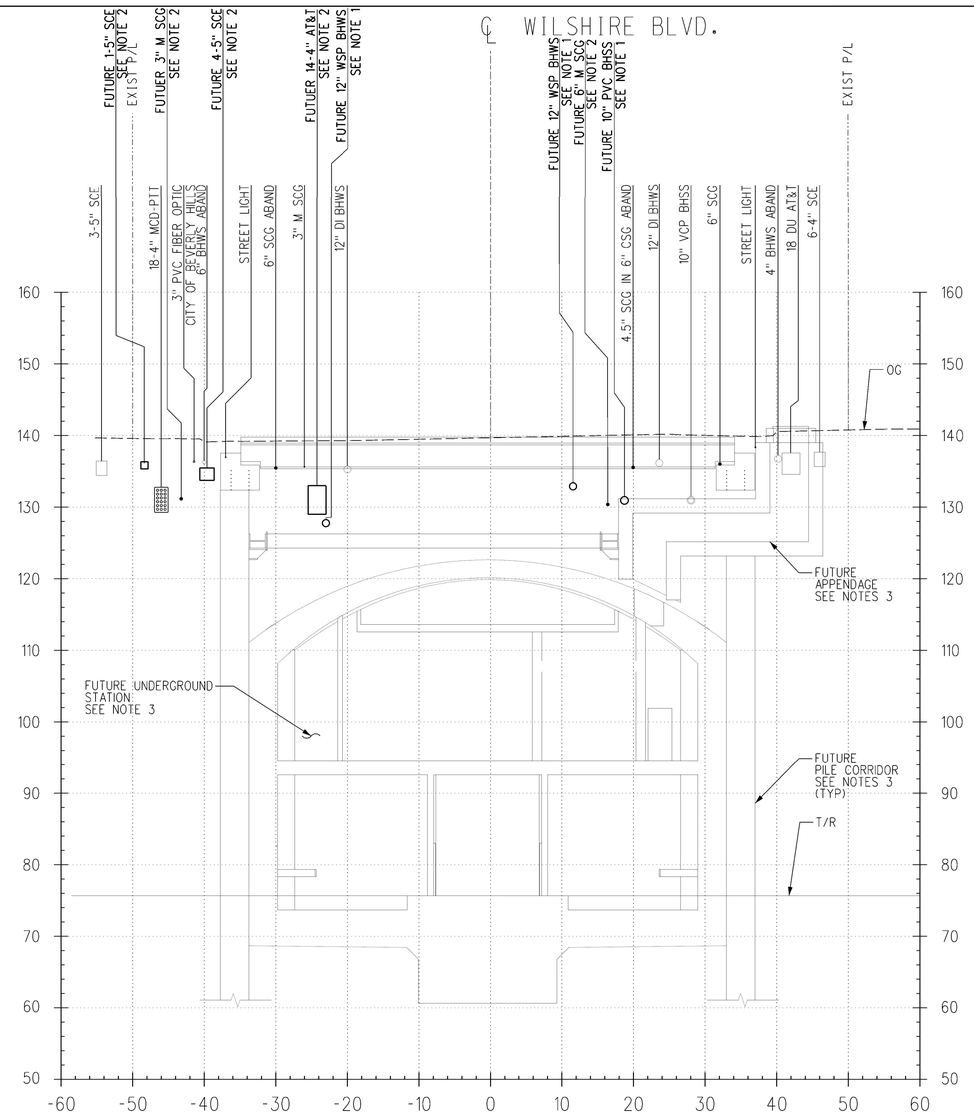

WILSHIRE/LA CIENEGA STATION
STA 565+49.75
1" = 10'
3
U-450

NOTES:

1. TO BE CONSTRUCTED PER C1056 ADVANCED UTILITY RELOCATIONS CONTRACT PACKAGE.
2. C1056 CONTRACTOR TO VERIFY STATUS OF UTILITY RELOCATIONS WITH THE OWNER.
3. FUTURE APPENDAGES, PILE CORRIDER, TEMPORARY DECK AND STATIONS SHOWN FOR REFERENCE ONLY AND N.I.C.

VERT HORIZ 10' 0 10' 20'

FOR INFORMATION ONLY

REV	DATE	BY	APP	REG NO	EXPIRES	SEAL HOLDER	DESCRIPTION

DESIGNED BY J. VARIAS
DRAWN BY J. MONG
CHECKED BY G. MUNSON
IN CHARGE Z. MUDAR
DATE 05/22/2013

Metro
PARSONS BRINCKERHOFF

LOS ANGELES COUNTY
METROPOLITAN TRANSPORTATION AUTHORITY

WESTSIDE SUBWAY EXTENSION
ADVANCED PRELIMINARY ENGINEERING

WILSHIRE/LA CIENEGA STATION
UTILITY RELOCATION CROSS SECTIONS
STA 565+49.75 & STA 565+69.37

CONTRACT NO
DRAWING NO U-472
REV
SCALE VERT: 1" = 10' HORIZ: 1" = 10'
SHEET NO 164

L:\LAWSBIM\WACBM\CADD\12_Utilities\Sheets\Sections\C0XXXup472.plg
4/1/2014
2:49:47 PM

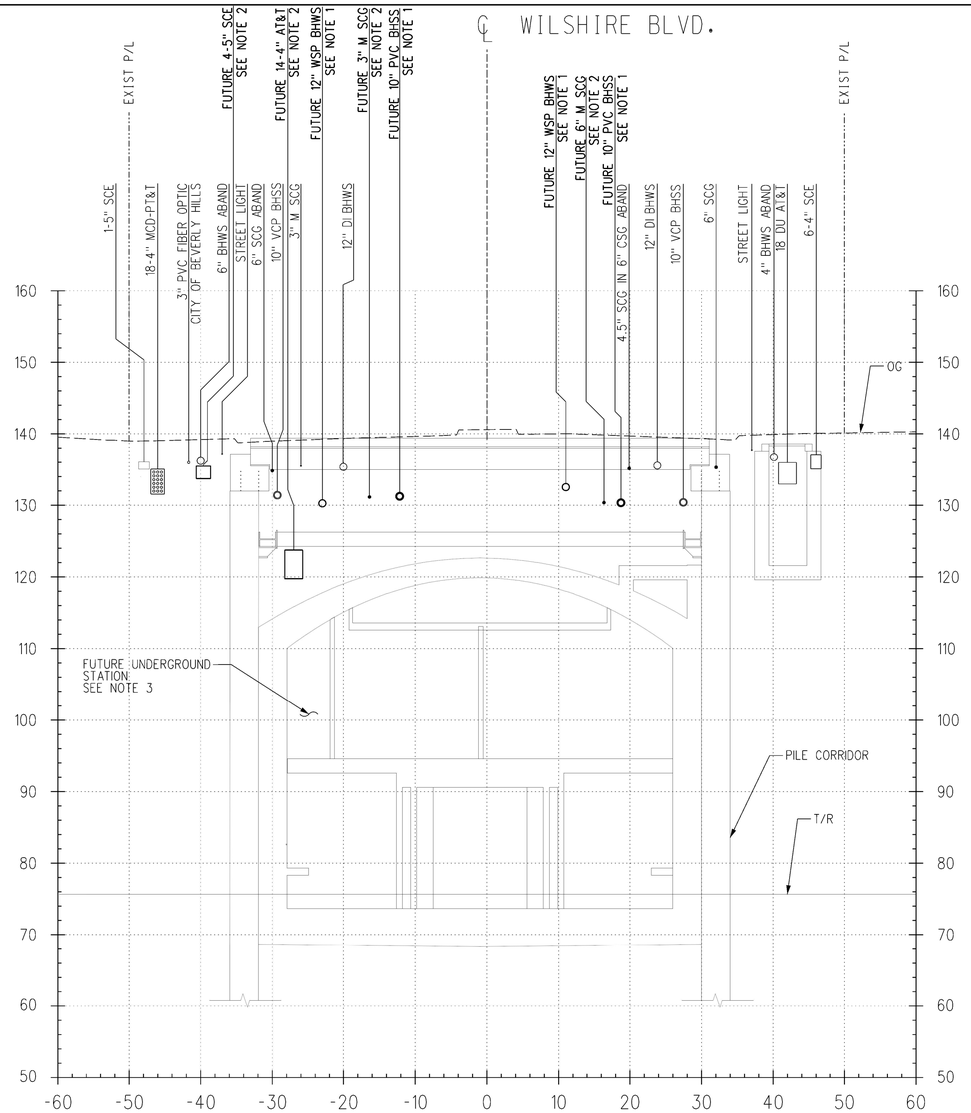

WILSHIRE/LA CIENEGA STATION
STA 566+36.21
1" = 10'
6
U-450

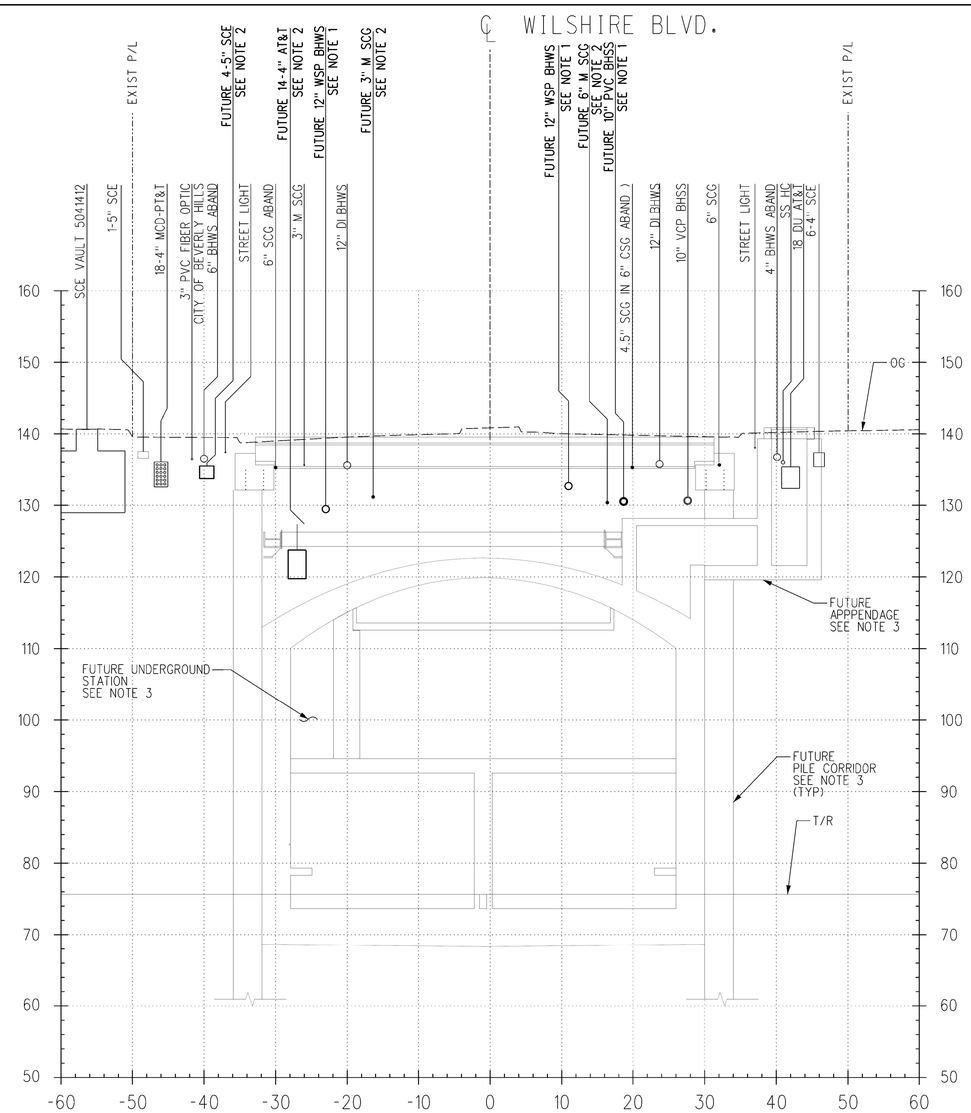

WILSHIRE/LA CIENEGA STATION
STA 566+03.73
1" = 10'
5
U-450

NOTES:

1. TO BE CONSTRUCTED PER C1056 ADVANCED UTILITY RELOCATIONS CONTRACT PACKAGE.
2. C1056 CONTRACTOR TO VERIFY STATUS OF UTILITY RELOCATIONS WITH THE OWNER.
3. FUTURE APPENDAGES, PILE CORRIDER, TEMPORARY DECK AND STATIONS SHOWN FOR REFERENCE ONLY AND N.I.C.

VERT 10' 0 10' 20'
HORIZ

FOR INFORMATION ONLY

REV	DATE	BY	APP	REG NO	EXPIRES	SEAL HOLDER	DESCRIPTION

DESIGNED BY J. VARIAS
DRAWN BY J. MONG
CHECKED BY G. MUNSON
IN CHARGE Z. MUDAR
DATE 05/22/2013

Metro
LOS ANGELES COUNTY
METROPOLITAN TRANSPORTATION AUTHORITY

PARSONS BRINCKERHOFF

WESTSIDE SUBWAY EXTENSION
ADVANCED PRELIMINARY ENGINEERING

WILSHIRE/LA CIENEGA STATION
UTILITY RELOCATION CROSS SECTIONS
STA 566+03.73 & STA 566+36.21

CONTRACT NO
DRAWING NO U-473
REV
SCALE VERT: 1" = 10'
HORIZ: 1" = 10'
SHEET NO 165

4/17/2014 2:51:21 PM
L:\LAWSBM\WALBM\CADD\12_Utilities Sheets\Sections C0XXup473.plg

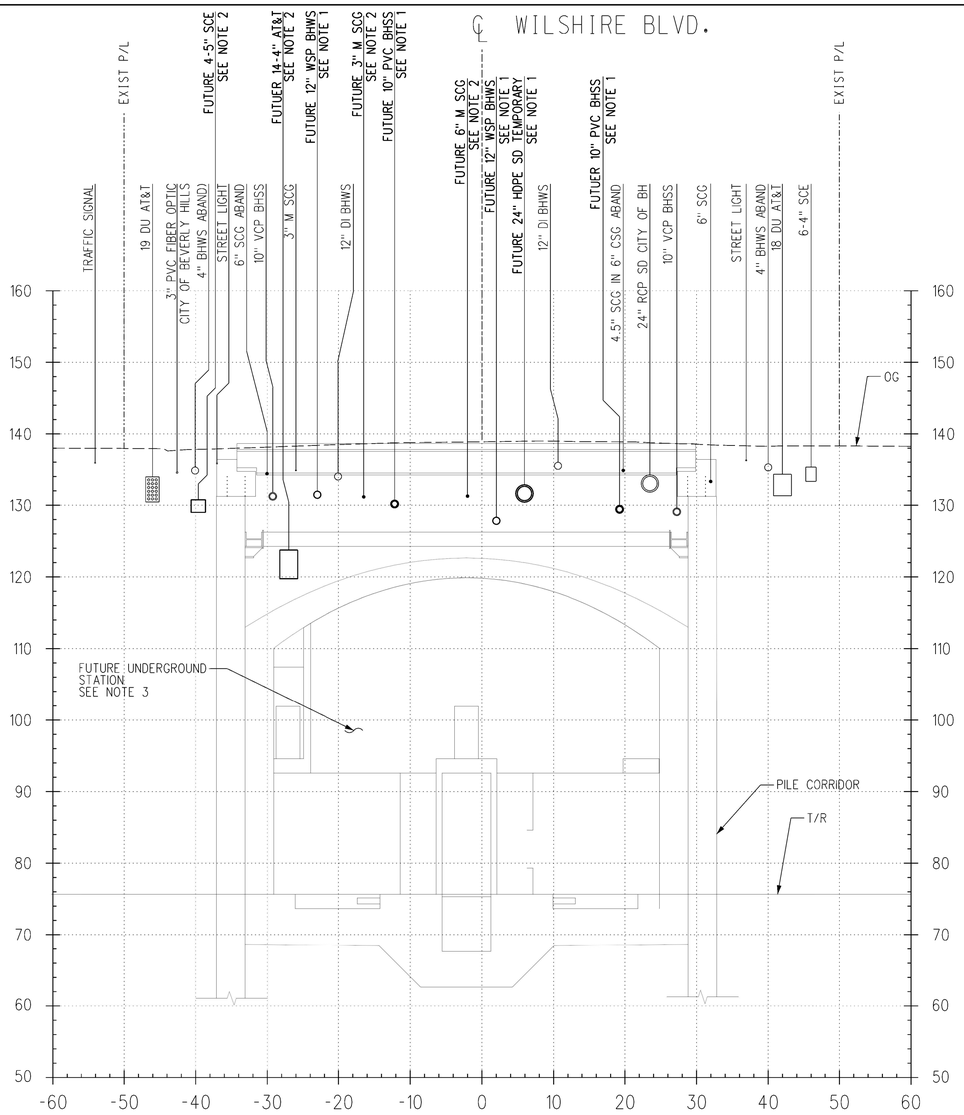

WILSHIRE/LA CIENEGA STATION
STA 568+06.62
1" = 10'
8
U-450

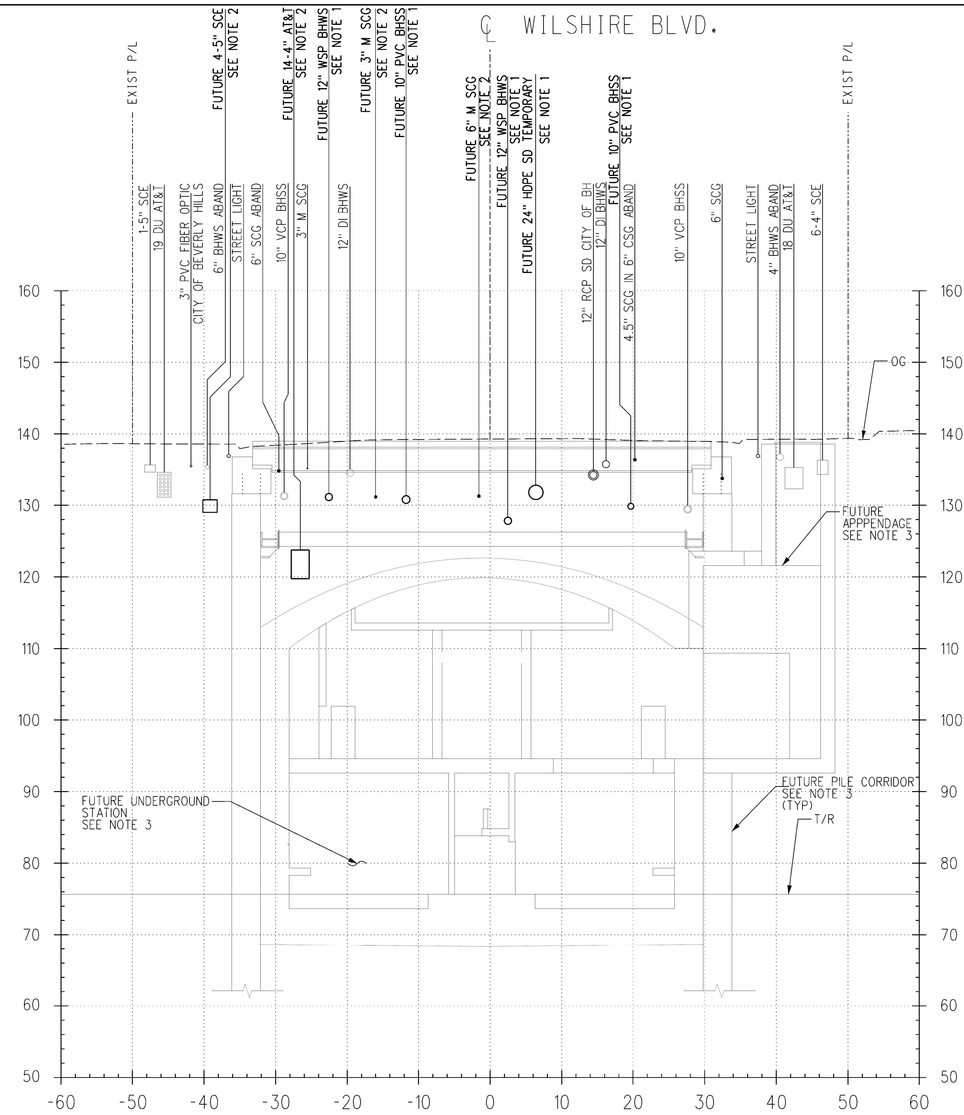

WILSHIRE/LA CIENEGA STATION
STA 567+27.93
1" = 10'
7
U-450

NOTES:

1. TO BE CONSTRUCTED PER C1056 ADVANCED UTILITY RELOCATIONS CONTRACT PACKAGE.
2. C1056 CONTRACTOR TO VERIFY STATUS OF UTILITY RELOCATIONS WITH THE OWNER.
3. FUTURE APPENDAGES, PILE CORRIDER, TEMPORARY DECK AND STATIONS SHOWN FOR REFERENCE ONLY AND N.I.C.

VERT 10' 0 10' 20'
HORIZ

FOR INFORMATION ONLY

REV	DATE	BY	APP	REG NO	EXPIRES	SEAL HOLDER	DESCRIPTION

DESIGNED BY J. VARIAS
DRAWN BY J. MONG
CHECKED BY G. MUNSON
IN CHARGE Z. MUDAR
DATE 05/22/2013

Metro
PARSONS BRINCKERHOFF

LOS ANGELES COUNTY
METROPOLITAN TRANSPORTATION AUTHORITY

WESTSIDE SUBWAY EXTENSION
ADVANCED PRELIMINARY ENGINEERING

WILSHIRE/LA CIENEGA STATION
UTILITY RELOCATION CROSS SECTIONS
STA 567+27.93 & STA 568+06.62

CONTRACT NO
DRAWING NO U-474
REV
SCALE VERT: 1" = 10' HORIZ: 1" = 10'
SHEET NO 166

L:\LAWSBIM\WACBM\CADD\I2_Utilities\Sheets\Sections\C0XXXup474.plg
4/1/2014
2:52:51 PM

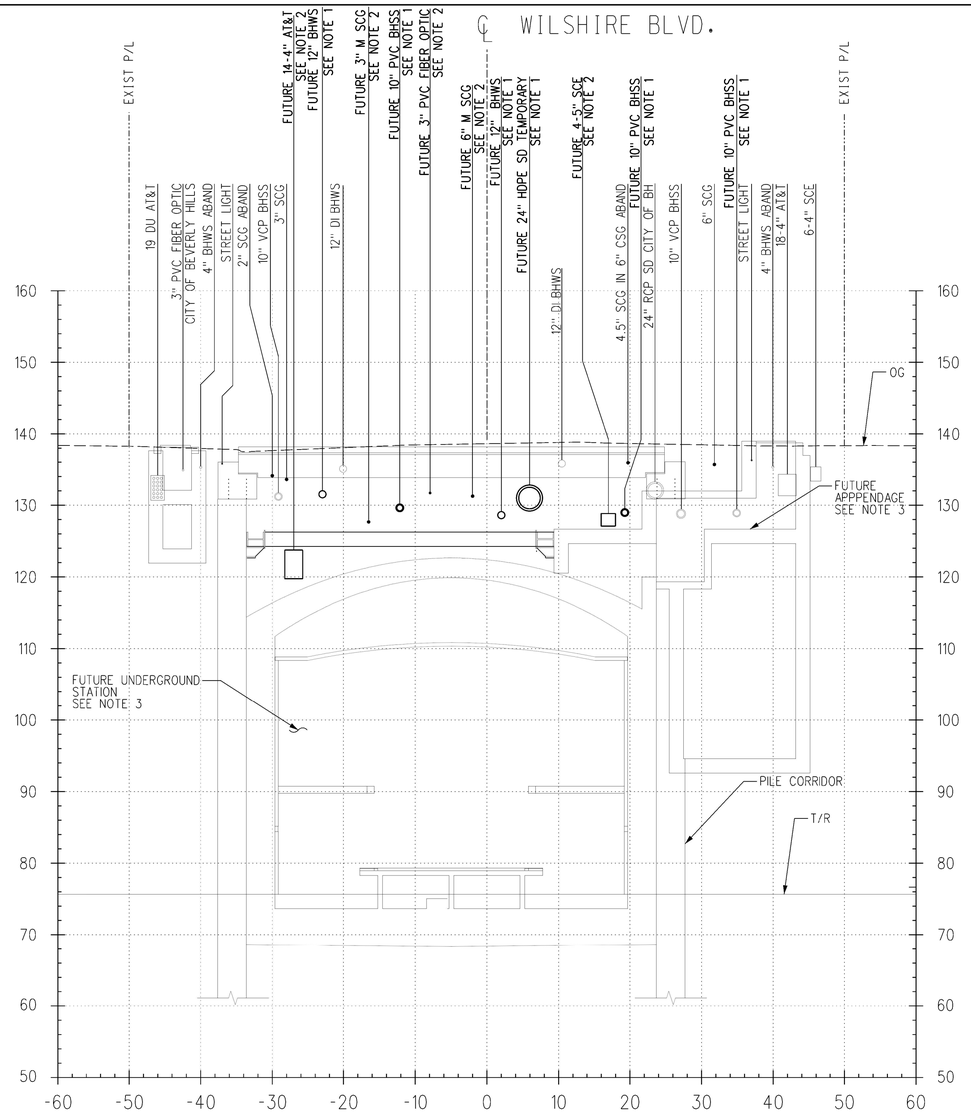

WILSHIRE/LA CIENEGA STATION
STA 568+91.06
1" = 10'

10
U-451

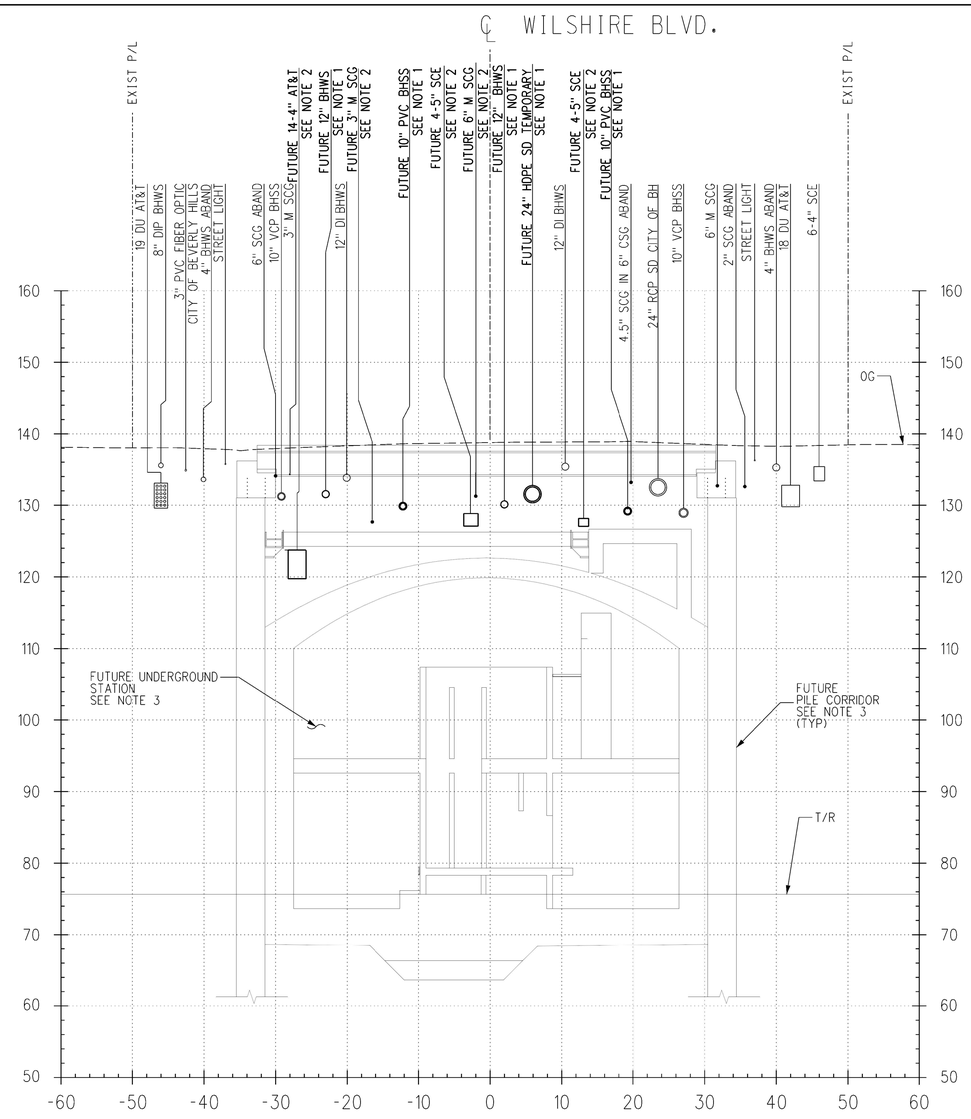

WILSHIRE/LA CIENEGA STATION
STA 568+53.85
1" = 10'

9
U-451

NOTES:

1. TO BE CONSTRUCTED PER C1056 ADVANCED UTILITY RELOCATIONS CONTRACT PACKAGE.
2. C1056 CONTRACTOR TO VERIFY STATUS OF UTILITY RELOCATIONS WITH THE OWNER.
3. FUTURE APPENDAGES, PILE CORRIDER, TEMPORARY DECK AND STATIONS SHOWN FOR REFERENCE ONLY AND N.I.C.

VERT 10' 0 10' 20'
HORIZ

FOR INFORMATION ONLY

REV	DATE	BY	APP	REG NO	EXPIRES	SEAL HOLDER	DESCRIPTION

DESIGNED BY J. VARIAS
DRAWN BY J. MONG
CHECKED BY G. MUNSON
IN CHARGE Z. MUDAR
DATE 05/22/2013

Metro

LOS ANGELES COUNTY
METROPOLITAN TRANSPORTATION AUTHORITY

PARSONS BRINCKERHOFF

WESTSIDE SUBWAY EXTENSION
ADVANCED PRELIMINARY ENGINEERING

WILSHIRE/LA CIENEGA STATION
UTILITY RELOCATION CROSS SECTIONS
STA 568+53.85 & STA 568+91.06

CONTRACT NO
DRAWING NO U-475 REV
SCALE VERT: 1" = 10'
HORIZ: 1" = 10'
SHEET NO 167

4/17/2014 2:54:22 PM
L:\LANSBIM\WALBH\CADD\12_Utilities\Sheets\Sections\C0XXup475.plg

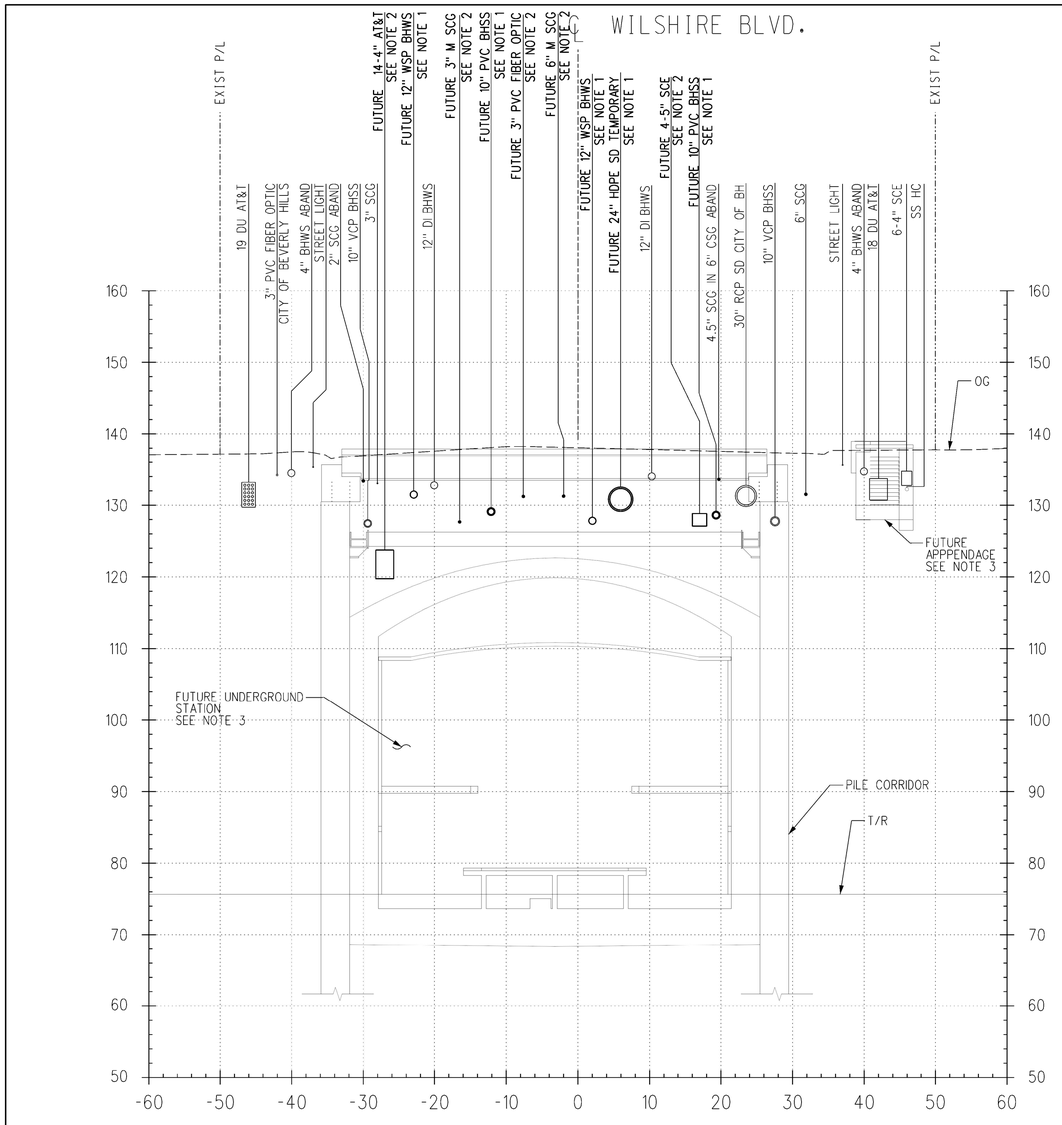

WILSHIRE/LA CIENEGA STATION
STA 569+74.56
1" = 10'
12
U-451

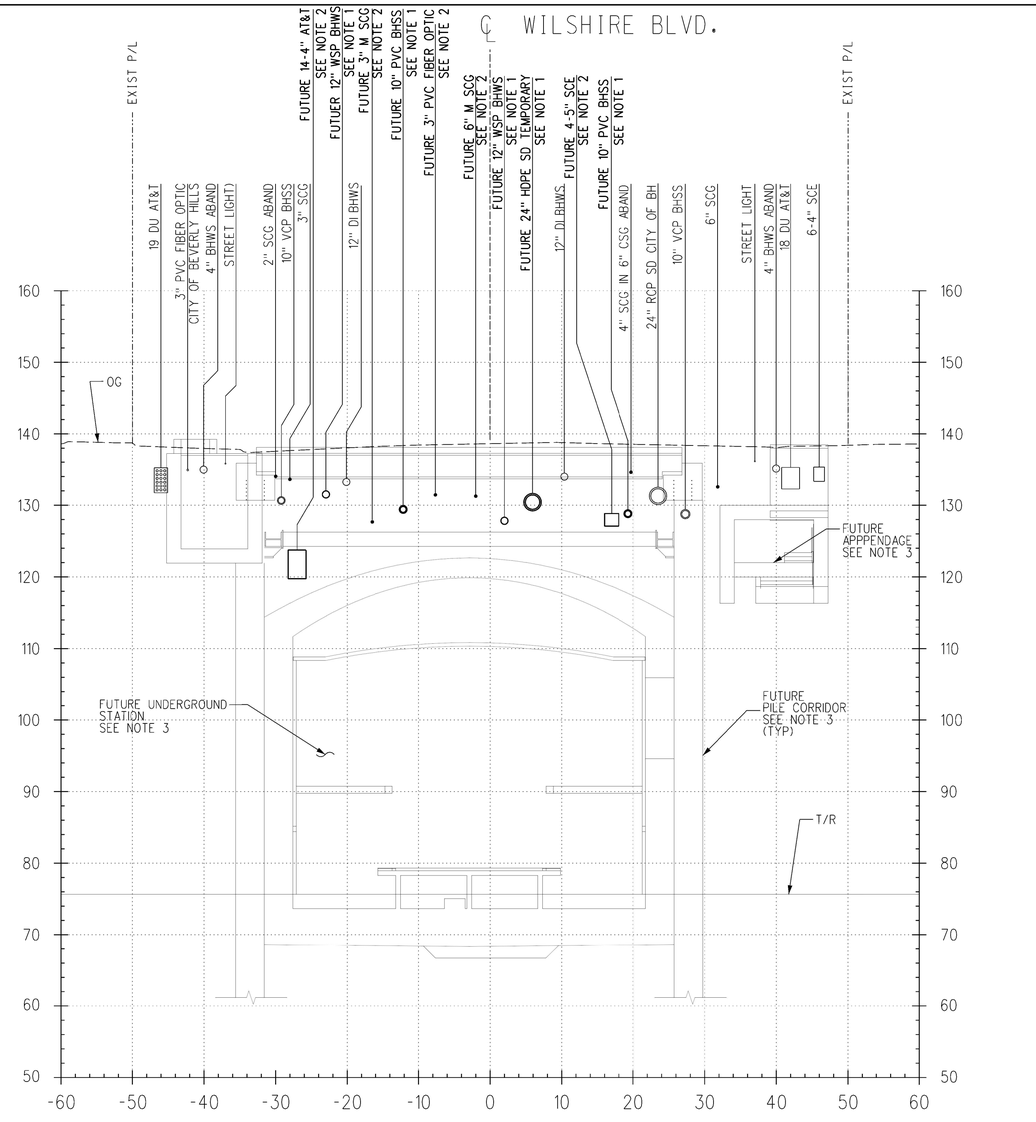

WILSHIRE/LA CIENEGA STATION
STA 569+26.61
1" = 10'
11
U-451

NOTES:

1. TO BE CONSTRUCTED PER C1056 ADVANCED UTILITY RELOCATIONS CONTRACT PACKAGE.
2. C1056 CONTRACTOR TO VERIFY STATUS OF UTILITY RELOCATIONS WITH THE OWNER.
3. FUTURE APPENDAGES, PILE CORRIDER, TEMPORARY DECK AND STATIONS SHOWN FOR REFERENCE ONLY AND N.I.C.

VERT 10' 0 10' 20'
HORIZ

FOR INFORMATION ONLY

REV	DATE	BY	APP	REG NO	EXPIRES	SEAL HOLDER	DESCRIPTION

DESIGNED BY J. VARIAS
DRAWN BY J. MONG
CHECKED BY C. MUNSON
IN CHARGE Z. MUDAR
DATE 05/22/2013

Metro
LOS ANGELES COUNTY
METROPOLITAN TRANSPORTATION AUTHORITY

PARSONS BRINCKERHOFF

WESTSIDE SUBWAY EXTENSION
ADVANCED PRELIMINARY ENGINEERING

WILSHIRE/LA CIENEGA STATION
UTILITY RELOCATION CROSS SECTIONS
STA 569+26.61 & STA 569+74.56

CONTRACT NO
DRAWING NO U-476 REV
SCALE VERT: 1" = 10'
HORIZ: 1" = 10'
SHEET NO 168

4/7/2014 2:56:21 PM
L:\LAWSBMW\ACBR\CADD\12_Utilities\Sheets\Sections\C0XXxsp476.plg

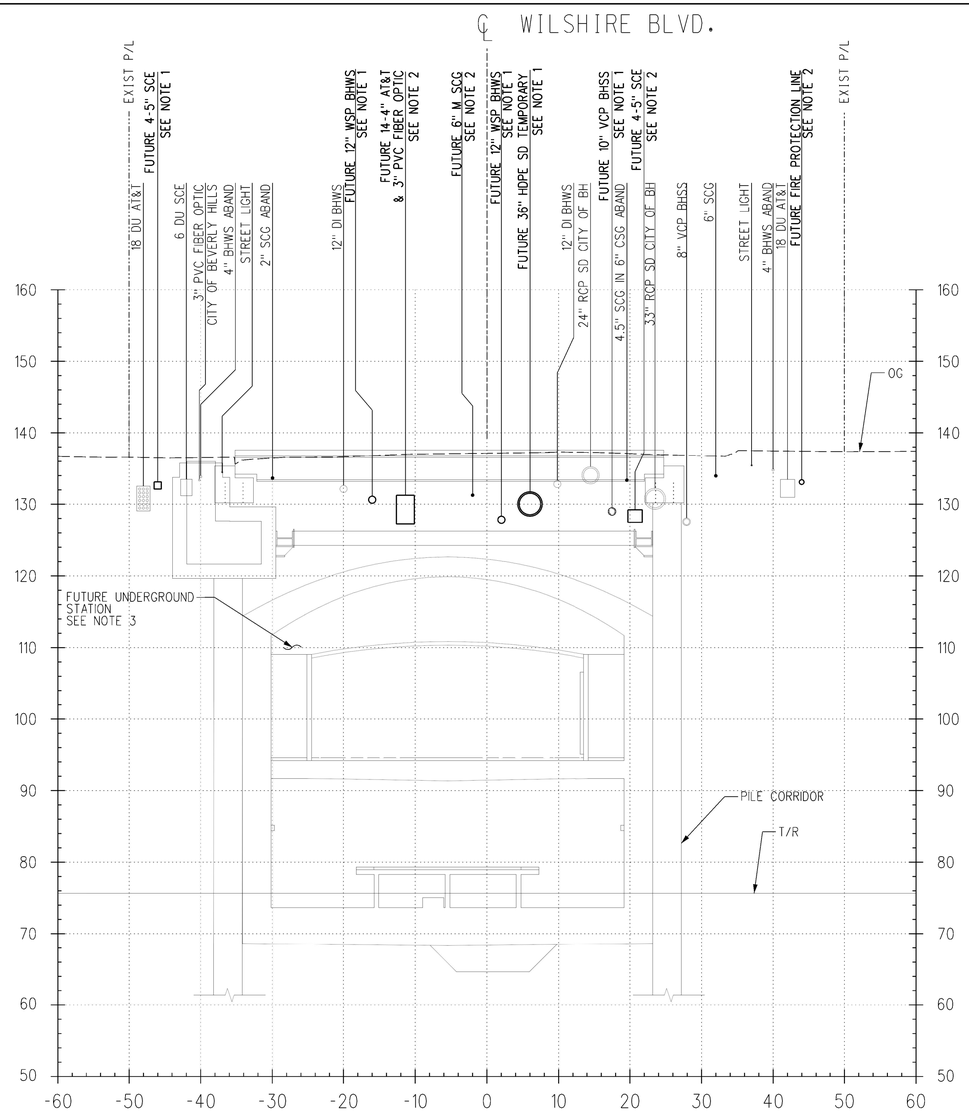

WILSHIRE/LA CIENEGA STATION
STA 573+77.24
1" = 10'
14
U-451

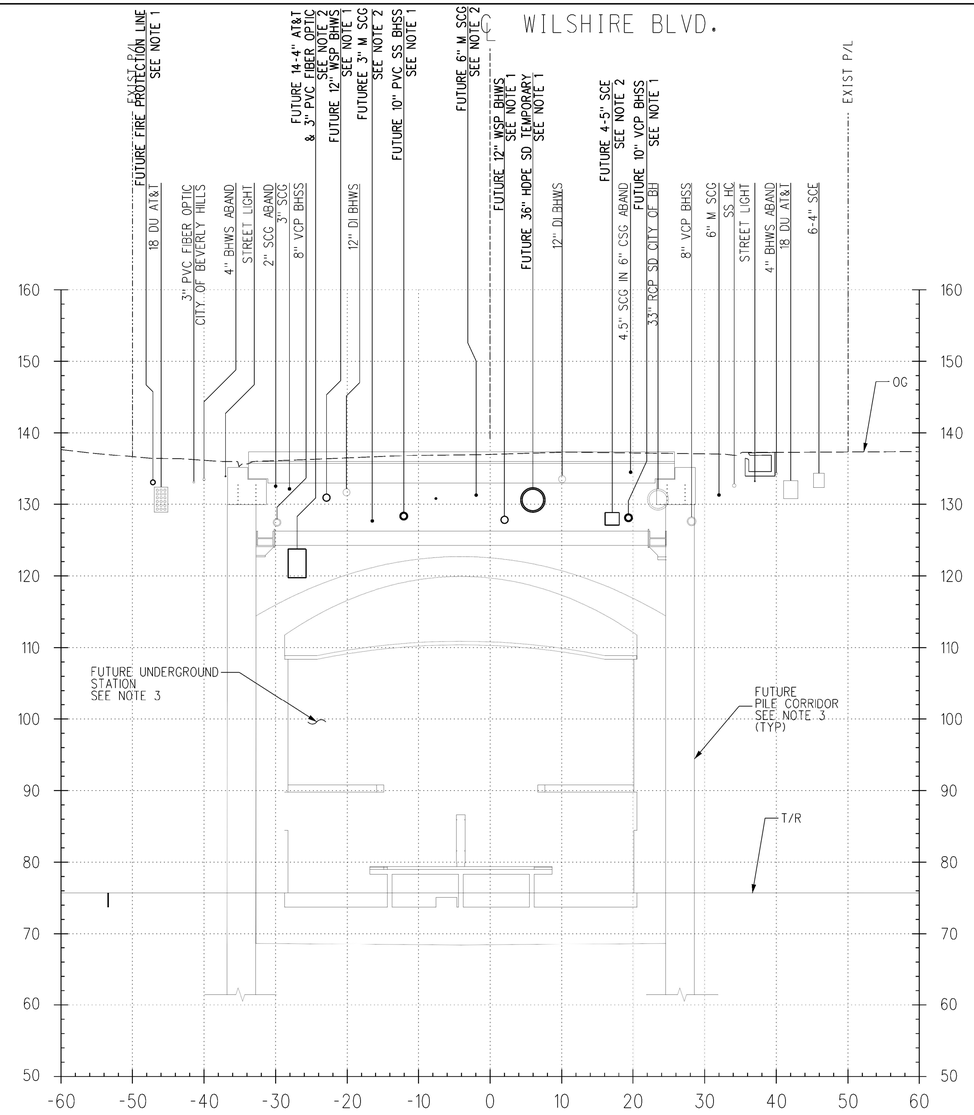

WILSHIRE/LA CIENEGA STATION
STA 570+95.74
1" = 10'
13
U-451

NOTES:

1. TO BE CONSTRUCTED PER C1056 ADVANCED UTILITY RELOCATIONS CONTRACT PACKAGE.
2. C1056 CONTRACTOR TO VERIFY STATUS OF UTILITY RELOCATIONS WITH THE OWNER.
3. FUTURE APPENDAGES, PILE CORRIDER, TEMPORARY DECK AND STATIONS SHOWN FOR REFERENCE ONLY AND N.I.C.

VERT 10' 0 10' 20'
HORIZ

FOR INFORMATION ONLY

REV	DATE	BY	APP	REG NO	EXPIRES	SEAL HOLDER	DESCRIPTION

DESIGNED BY J. VARIAS
DRAWN BY J. MONG
CHECKED BY G. MUNSON
IN CHARGE Z. MUDAR
DATE 05/22/2013

Metro
PARSONS BRINCKERHOFF

LOS ANGELES COUNTY
METROPOLITAN TRANSPORTATION AUTHORITY

WESTSIDE SUBWAY EXTENSION
ADVANCED PRELIMINARY ENGINEERING

WILSHIRE/LA CIENEGA STATION
UTILITY RELOCATION CROSS SECTIONS
STA 570+95.74 & STA 573+77.24

CONTRACT NO
DRAWING NO U-477
REV
SCALE VERT: 1" = 10' HORIZ: 1" = 10'
SHEET NO 169

L:\LAWSBIM\WACBM\CADD\12_Utilities\Sheets\Sections\C0XXXup477.plg 4/1/2014 2:57:53 PM

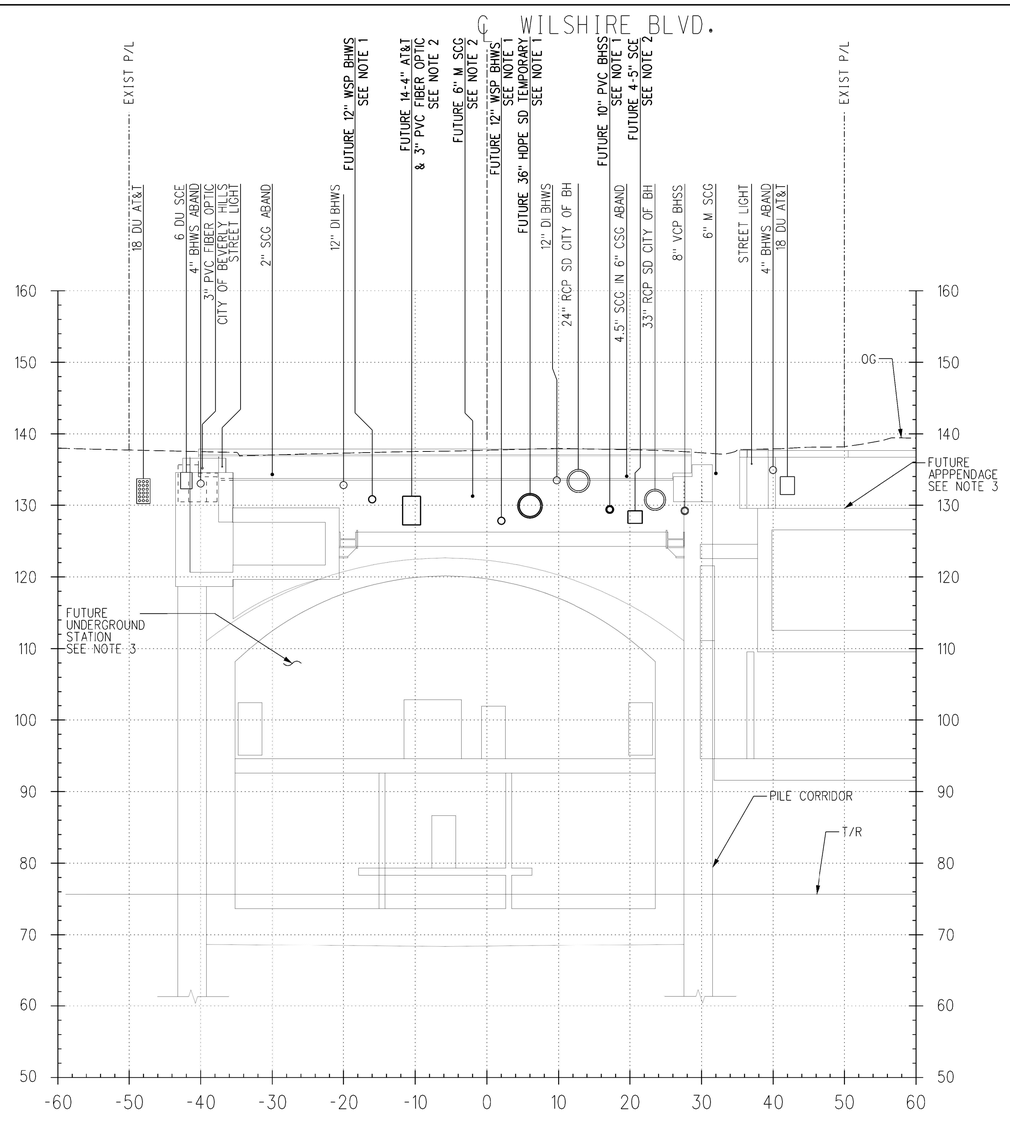

WILSHIRE/LA CIENEGA STATION
STA 574+28.65
1" = 10'
16
U-451

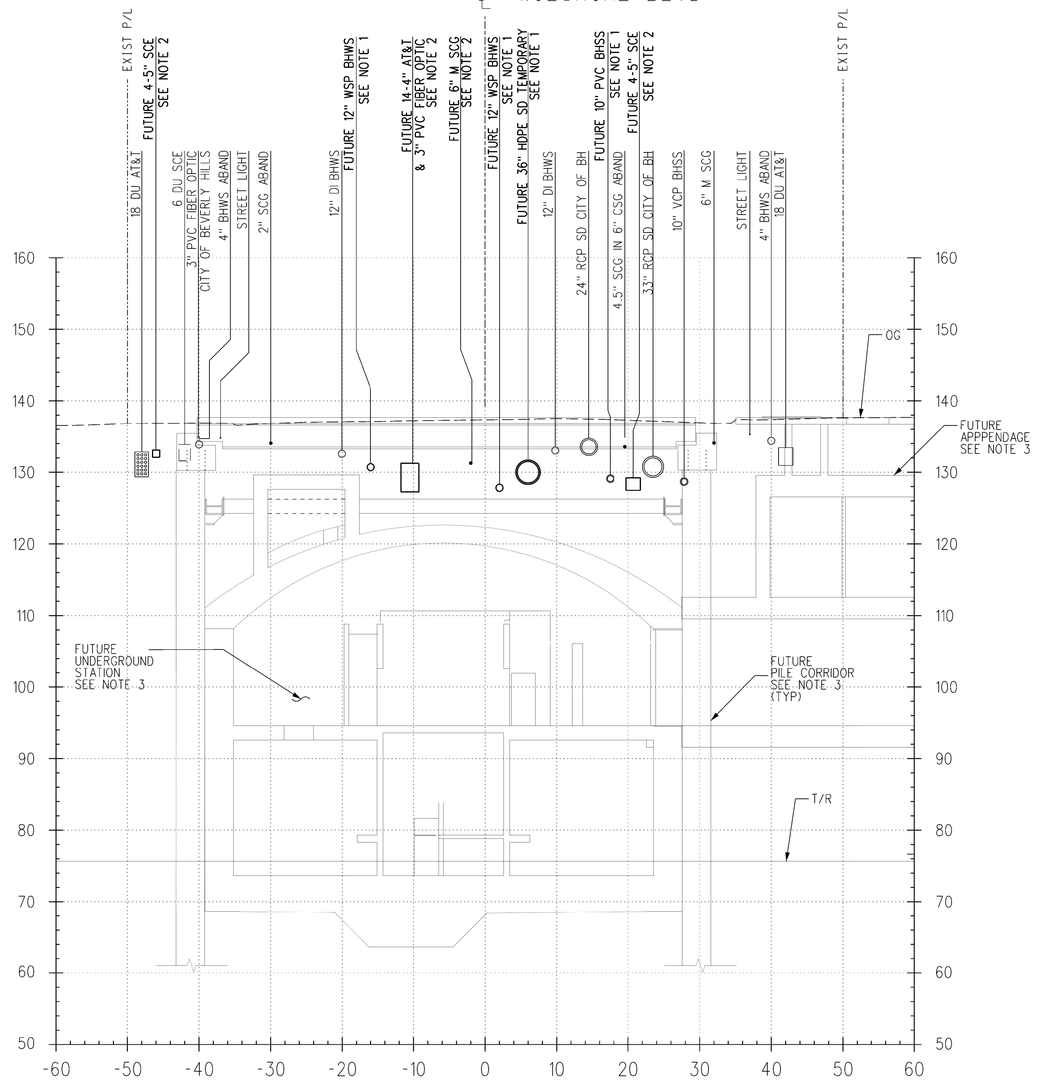

WILSHIRE/LA CIENEGA STATION
STA 573+90.95
1" = 10'
15
U-451

NOTES:

1. TO BE CONSTRUCTED PER C1056 ADVANCED UTILITY RELOCATIONS CONTRACT PACKAGE.
2. C1056 CONTRACTOR TO VERIFY STATUS OF UTILITY RELOCATIONS WITH THE OWNER.
3. FUTURE APPENDAGES, PILE CORRIDER, TEMPORARY DECK AND STATIONS SHOWN FOR REFERENCE ONLY AND N.I.C.

VERT 10' 0 10' 20'
HORIZ

FOR INFORMATION ONLY

REV	DATE	BY	APP	REG NO	EXPIRES	SEAL HOLDER	DESCRIPTION

DESIGNED BY J. VARIAS
DRAWN BY J. MONG
CHECKED BY G. MUNSON
IN CHARGE Z. MUDAR
DATE 05/22/2013

Metro
PARSONS BRINCKERHOFF

LOS ANGELES COUNTY
METROPOLITAN TRANSPORTATION AUTHORITY

WESTSIDE SUBWAY EXTENSION
ADVANCED PRELIMINARY ENGINEERING

WILSHIRE/LA CIENEGA STATION
UTILITY RELOCATION CROSS SECTIONS
STA 573+90.95 & STA 574+28.65

CONTRACT NO
DRAWING NO U-478
REV
SCALE VERT: 1" = 10' HORIZ: 1" = 10'
SHEET NO 170

L:\LAWSBIM\WACBM\CADD\I2_Utilities\Sheets\Sections\C0XXXup478.plg
4/1/2014
2:59:30 PM

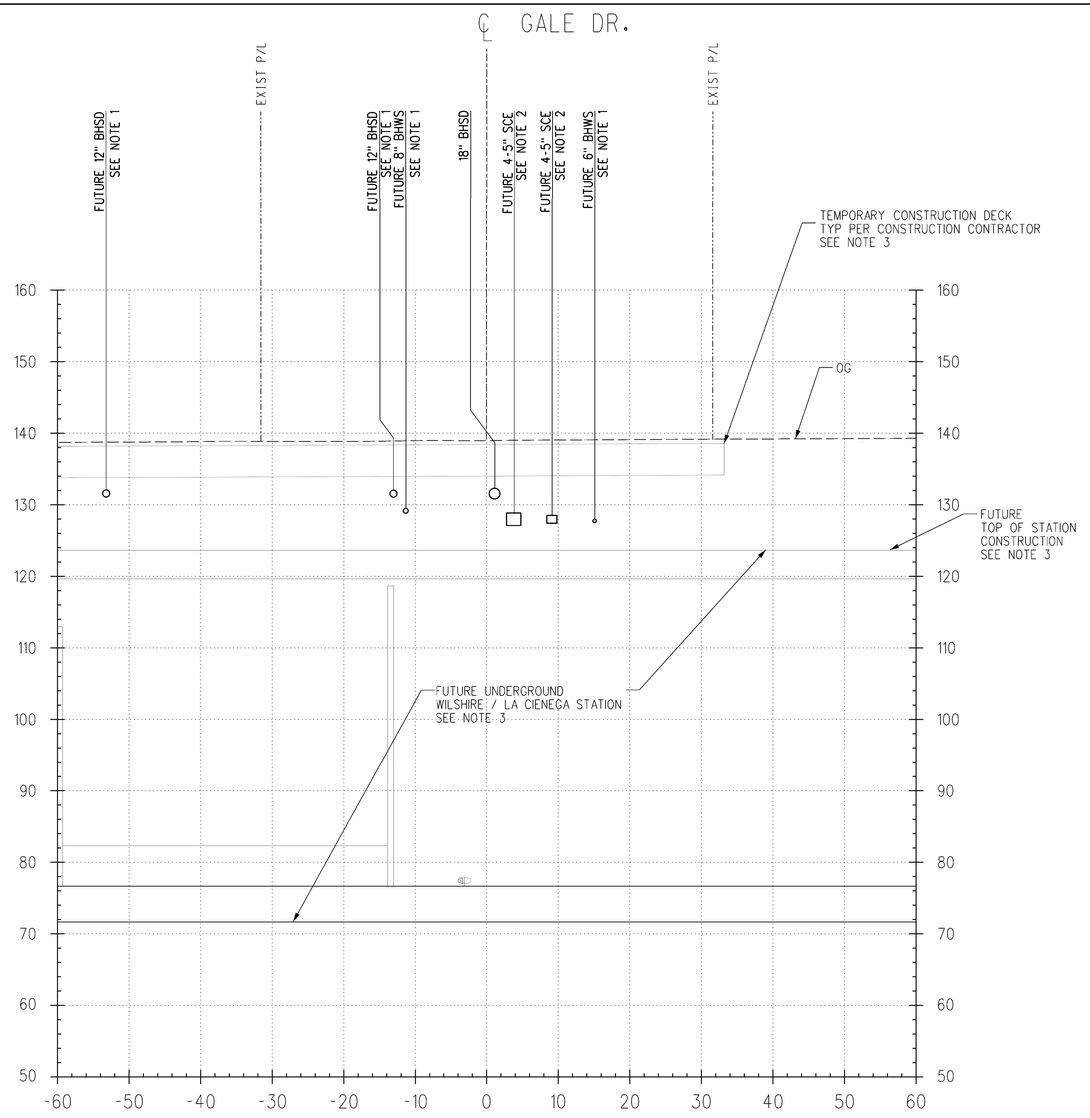

WILSHIRE/LA CIENEGA STATION
WILSHIRE AT GALE DR INTERSECTION
1" = 10'
18
U-451

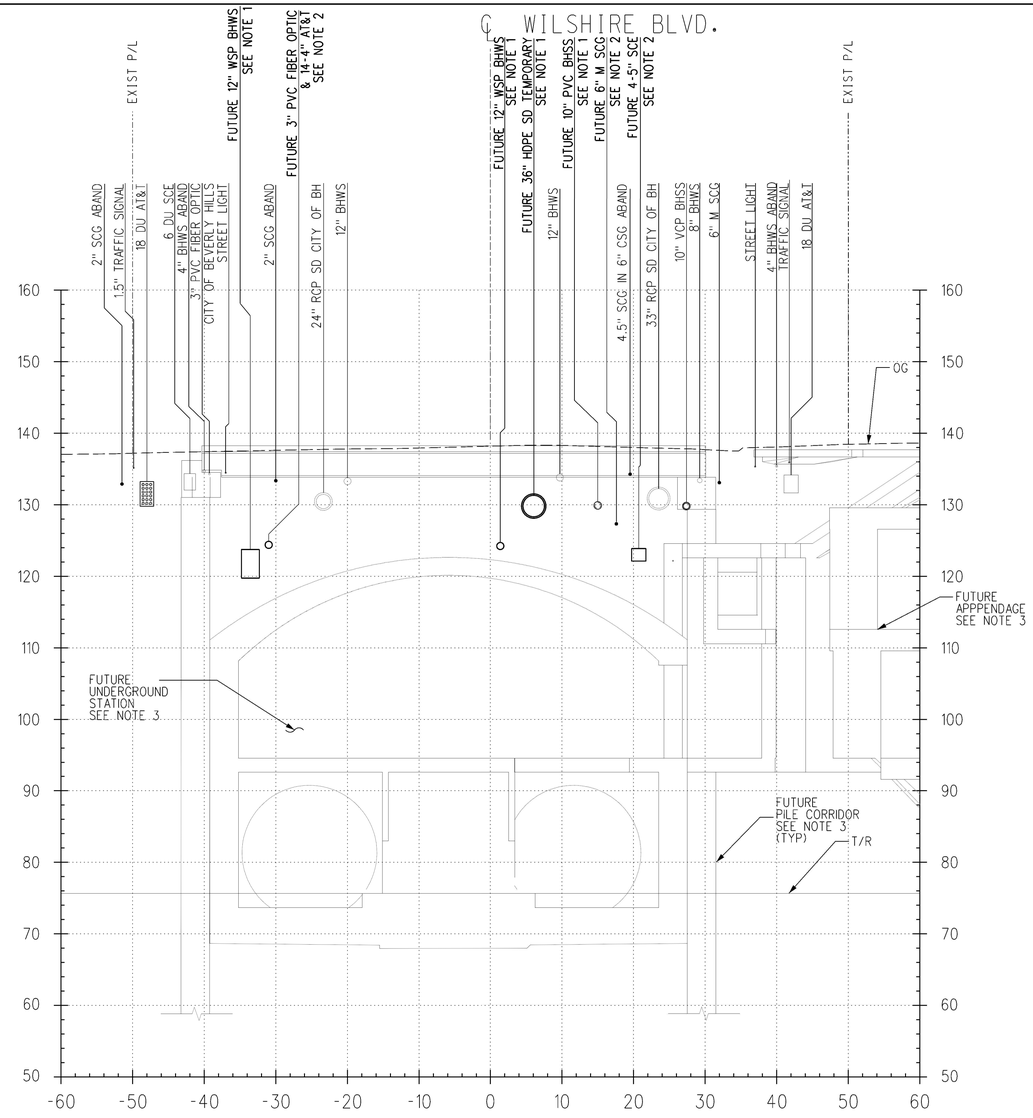

WILSHIRE/LA CIENEGA STATION
STA 574+88.79
1" = 10'
17
U-452

NOTES:

1. TO BE CONSTRUCTED PER C1056 ADVANCED UTILITY RELOCATIONS CONTRACT PACKAGE.
2. C1056 CONTRACTOR TO VERIFY STATUS OF UTILITY RELOCATIONS WITH THE OWNER.
3. FUTURE APPENDAGES, PILE CORRIDER, TEMPORARY DECK AND STATIONS SHOWN FOR REFERENCE ONLY AND N.I.C.

VERT 10' 0 10' 20'
HORIZ

FOR INFORMATION ONLY

REV	DATE	BY	APP	REG NO	EXPIRES	SEAL HOLDER	DESCRIPTION

DESIGNED BY J. VARIAS
DRAWN BY J. MONG
CHECKED BY G. MUNSON
IN CHARGE Z. MUDAR
DATE 05/22/2013

Metro
PARSONS BRINCKERHOFF

LOS ANGELES COUNTY
METROPOLITAN TRANSPORTATION AUTHORITY

WESTSIDE SUBWAY EXTENSION
ADVANCED PRELIMINARY ENGINEERING

WILSHIRE/LA CIENEGA STATION
UTILITY RELOCATION CROSS SECTIONS
STA 574+88.79

CONTRACT NO
DRAWING NO U-479
REV
SCALE VERT: 1" = 10' HORIZ: 1" = 10'
SHEET NO 171

L:\LAWSBIM\WACBM\CADD\12_Utilities\Sheets\Sections\C0XXXup479.plg
4/1/2014
3:01:25 PM

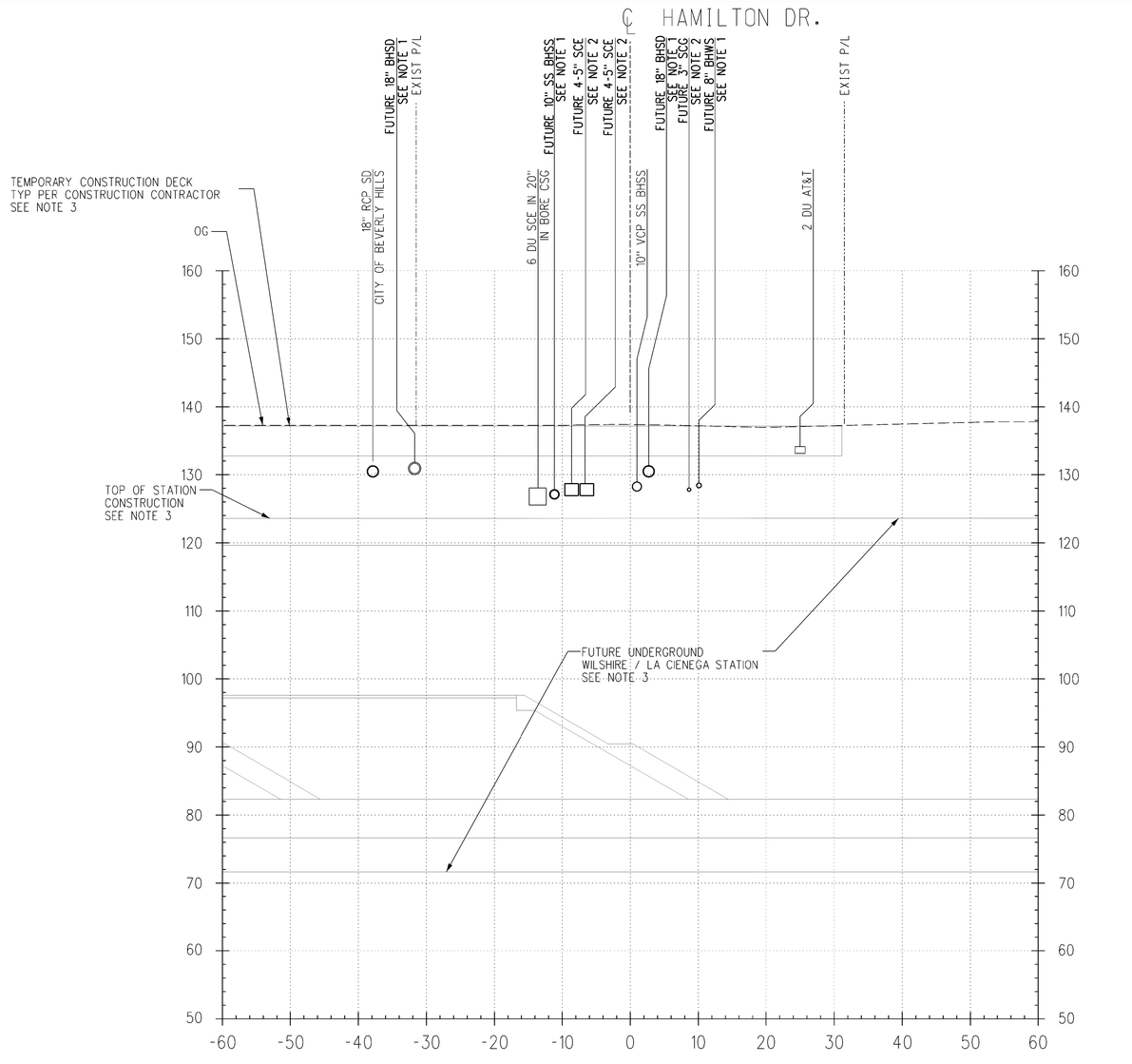

WILSHIRE/LA CIENEGA STATION
WILSHIRE AT HAMILTON DR INTERSECTION

1" = 10'

19
U-451

NOTES:

1. TO BE CONSTRUCTED PER C1056 ADVANCED UTILITY RELOCATIONS CONTRACT PACKAGE.
2. C1056 CONTRACTOR TO VERIFY STATUS OF UTILITY RELOCATIONS WITH THE OWNER.
3. FUTURE APPENDAGES, PILE CORRIDER, TEMPORARY DECK AND STATIONS SHOWN FOR REFERENCE ONLY AND N.I.C.

VERT 10' 0 10' 20'
HORIZ

FOR INFORMATION ONLY

REV	DATE	BY	APP	REG NO	EXPIRES	SEAL HOLDER	DESCRIPTION

DESIGNED BY J. VARIAS
DRAWN BY J. MONG
CHECKED BY G. MUNSON
IN CHARGE Z. MUDAR
DATE 05/22/2013

Metro
PARSONS BRINCKERHOFF

LOS ANGELES COUNTY
METROPOLITAN TRANSPORTATION AUTHORITY

WESTSIDE SUBWAY EXTENSION
ADVANCED PRELIMINARY ENGINEERING

WILSHIRE/LA CIENEGA STATION
UTILITY RELOCATION CROSS SECTIONS

CONTRACT NO
DRAWING NO U-480
REV
SCALE VERT: 1" = 10'
HORIZ: 1" = 10'
SHEET NO 172

3:04:27 PM
4/1/2014
L:\LAWSBIM\WACBM\CADD\12_Utilities\Sheets\Sections\C0XXXup480.plg